LIST OF TESTS		
I	Field Hardness Test (*in-situ*)	
II	Laboratory Test (Hardness, CVN, Chemistry)	
III	Full Size Test	Full Size Tension
		Mechanical (Coupon Tension, CVN, Hardness)
		Chemical Analysis
		Metallurgical Analysis
		Galvanization Chemistry
IV	Stress Corrosion Test (Wet Test)	Following "Townsend" Test Protocol

DRAFT - IN PROGRESS

TEST I : FIELD HARDNESS TEST

GENERAL PROCEDURE:

1) Galvanizing to be ground off the top surface of the rods using a grinder.
2) Suitable sand paper to be lightly applied after grinding to achieve a surface profile of 15 µm or less per ASTM A1038.
3) A profile meter to be utilized to ensure surface roughness is acceptable.
4) The surface shall be free from oil, grease, dust, rust, and surface coatings.
5) Measurements to be taken as shown in right hand side Hardness Readings Section.
6) After measuring the hardness on each rod, the equipment readings shall be verified against a certified hardness reference block by taking 2 additional measurements.

GENERAL NOTES:

Note 1: Field hardness equipment is subject to greater variability than lab equipment. In addition,factors including wind and difficult access conditions can contribute to such variability.

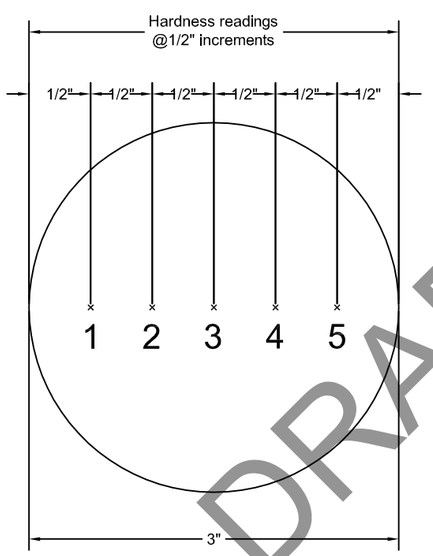

Hardness Readings for 3"Ø Rod (Typ.)

(Other Diameters Similar)

DRAFT - IN P

Revision No:	By:	Date:

SELF-ANCHORED SUSPENSION BRIDGE

Testing Protocol:
FIELD HARDNESS TEST

Drawn By:	BD	SHEET NUMBER	TP-01
Date:	5/17/2013		

TEST II : LABORATORY TESTS

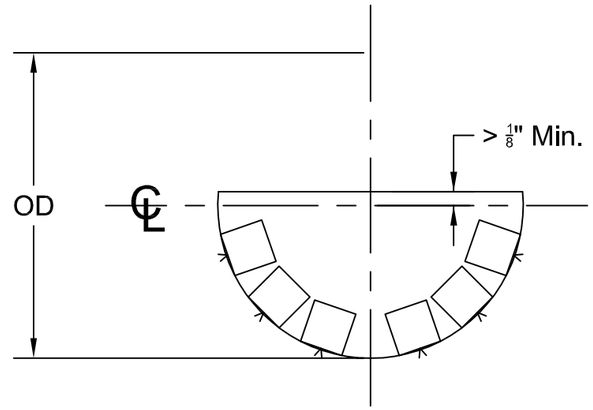

CHARPY SAMPLES (See Note 1)

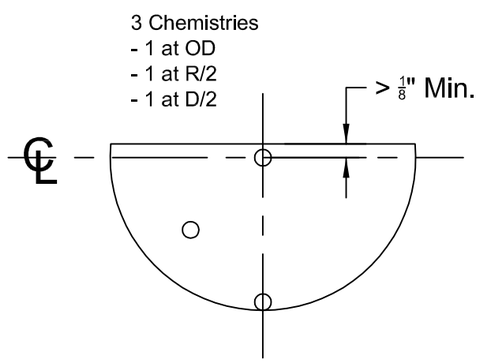

CHEMISTRY

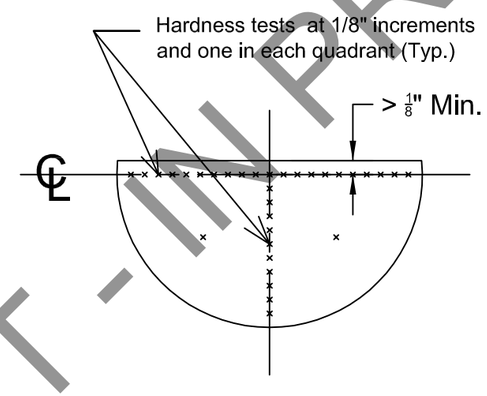

ROCKWELL C HARDNESS

DRAFT - IN PROGRESS

Notes:

1.Required minimum sample thickness for Charpy test is 2.5" inches.

Revision No:	By:	Date:

SELF-ANCHORED SUSPENSION BRIDGE

Testing Protocol:
LABORATORY TESTS

Drawn By:	BD	SHEET NUMBER	TP-02
Date:	5/17/2013		

TEST III : FULL SIZE TENSION TEST

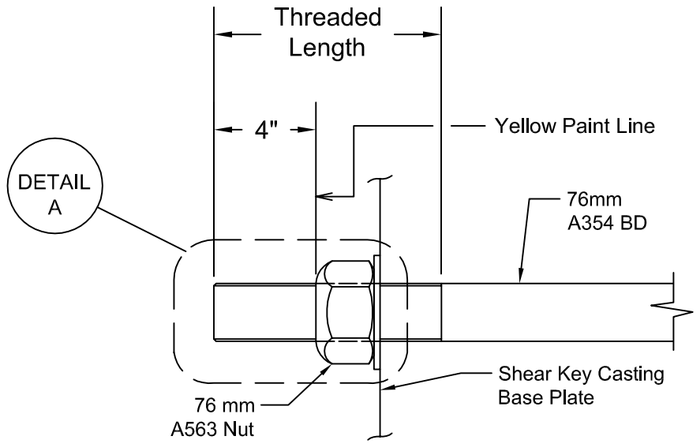

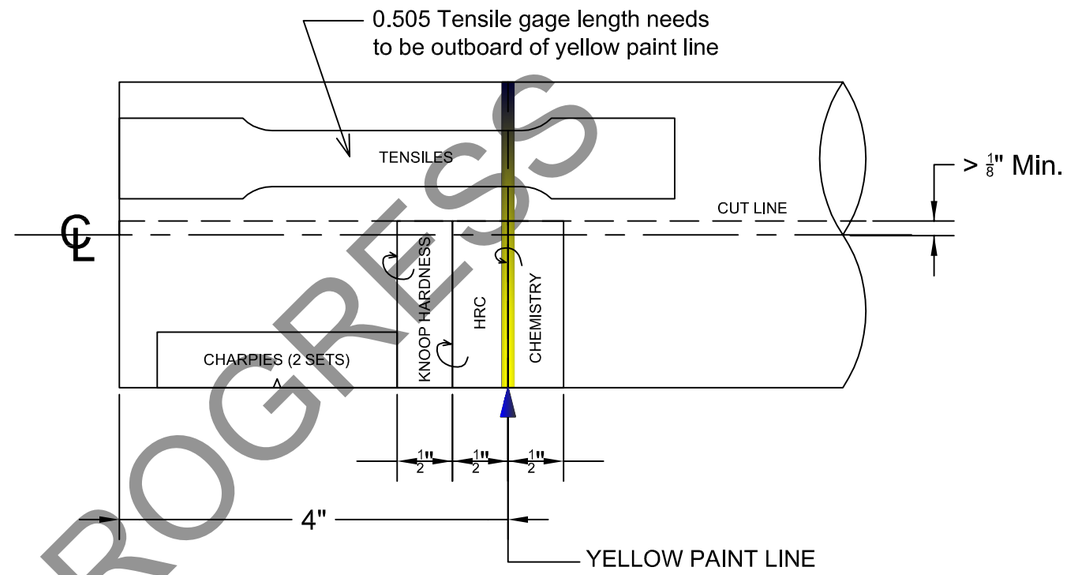

DETAIL A

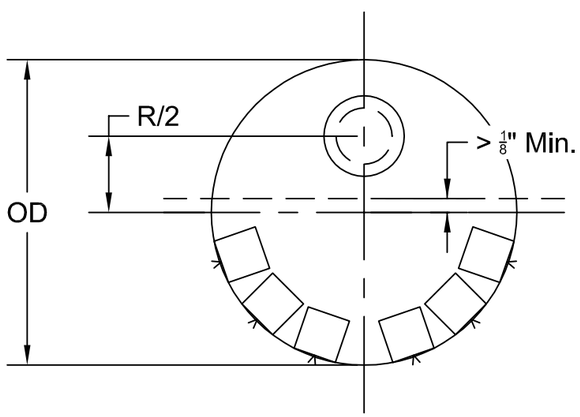

TENSILE AND CHARPY SAMPLES

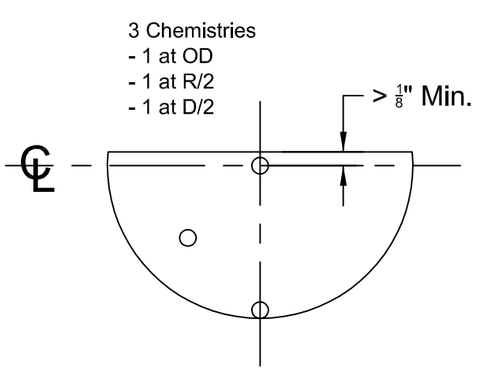

CHEMISTRY

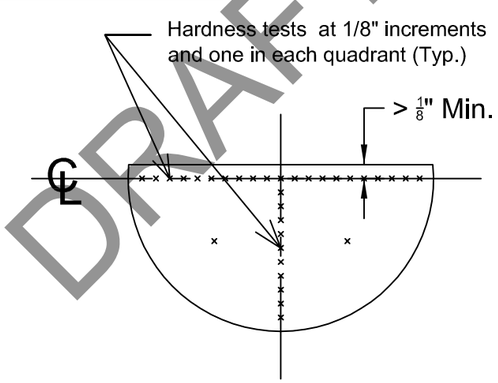

ROCKWELL C HARDNESS

TESTING PROTOCOL

Sample Selection:

1.Perform sample selection per sampling frequency on page 7 of 8

Extended Testing Protocol:
(Tests listed below to be performed at an independent testing laboratory accredited per ISO 17025 or approved by Caltrans).

1. Load full size sample to failure.
2. Perform Charpy V-Notch testing of broken rods at room temperature and at 40 degrees F.
3. Perform reduced section tensile tests (.505 diameter) of the broken rods as detailed in "Tensile and Charpy Samples" Section.
4. Perform hardness Testing (Rockwell C and Knoop Micro-hardness) of broken rods as detailed in "Rockwell C Hardness" Section.
5. Perform chemical analysis of broken rods as detailed in "Chemistry" Section.
6. Perform scanning electron microscopy - examination of fracture features on broken rods.
7. Perform Micro-structural examination of broken rods at the threaded area.

DRAFT - IN PROGRESS

Revision No:	By:	Date:

SELF-ANCHORED SUSPENSION BRIDGE

Testing Protocol:
FULL SIZE TENSION TEST

Drawn By:	BD	SHEET NUMBER	TP-03
Date:	5/17/2013		

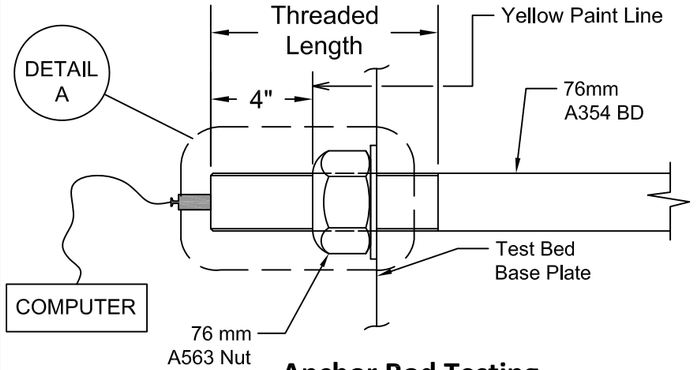

Anchor Rod Testing
(Test Setup)

TEST IV : WET TEST

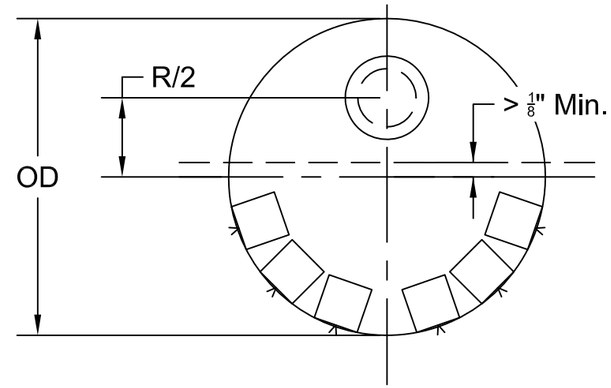

TENSILE AND CHARPY SAMPLES

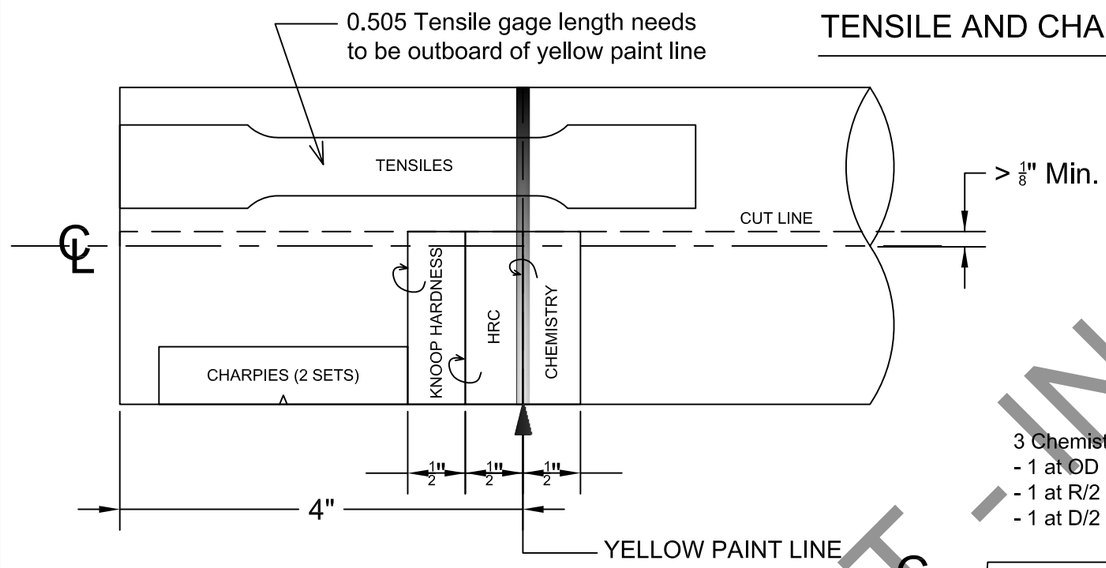

DETAIL A

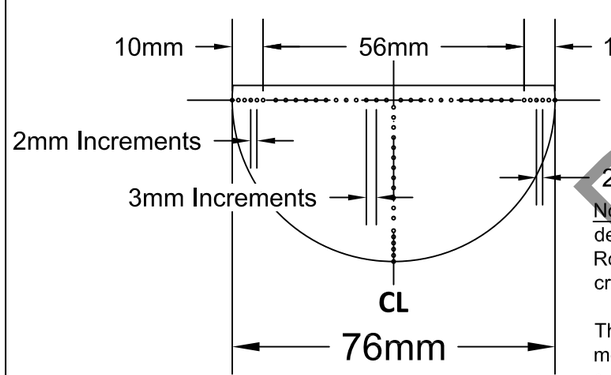

ROCKWELL C HARDNESS

Note 1: Perform hardness tests along 2 traverses @ 90 degrees. The spacing between the readings for the Rockwell C measurements shall be 3mm for the entire cross section.

The spacing between the readings for the Knoop measurements only shall be as follows:

- 2mm increments for the first 10mm from the exterior.
- 3mm increments in between.

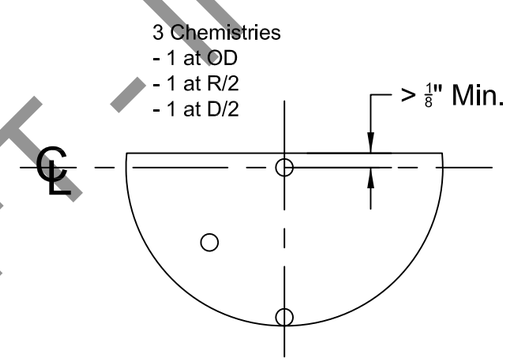

CHEMISTRY

Anchor Rod Wet Test (192 Rods)

This testing protocol was developed with the assistance of Dr. Herb Townsend, PhD,PE, Dr. Karl Frank, PhD,PE; and Mr. Doug Williams, PE.

Sample Selection: Rod selection shall be as determined by the Design Joint Venture; 4 rods total.

Testing Protocol:
(Tests listed below to be performed by an independent testing laboratory accredited per ISO 17025 or approved by Caltrans).

1. Prior to extraction, ABFJV shall reload the selected rods up to 0.75Fu and maintain the load for 24 hours.
2. After 24 hours, the rods shall be extracted and nondestructively tested.
3. Rods shall be cleaned to remove all contaminants and lubricants from the threads.
4. Each rod shall be Ultrasonically Tested and Magnetic Particle Tested to identify existing cracks.
5. The samples shall be transported to the selected testing facility where the slow loading tests in a 3.5% NaCl solution will be performed as follows:

%Fu	Load per Rod (Kips)	Time* (hr)
0.30	251	48
0.40	334	48
0.50	418	48
0.55	460	48
0.60	501	48
0.65	543	48
0.70	585	48
0.75	627	48
0.80	669	48
0.85	710	120

* Hold time at each load step
** The testing facility shall record the strain using a strain gauge, in addition to keeping a tabulated record showing the applied load vs measured strain vs time.

6. After maintaining the load at 0.85 Fu for 5 days (120 hours) as shown above, load the samples to failure.
7. Transport the fractured sections to the fracture analysis lab for further assessment.
8. Perform Charpy V-Notch testing of broken rods at room temperature and at 70 degrees, per "Tensile and Charpy Samples" Section.
9. Perform reduced section tensile tests (.505 diameter) of the broken rods as close to the fracture surface as possible. Tensile tests to be performed as detailed in "Tensile and Charpy Samples" Section.
10. Perform Rockwell C hardness and Knoop (Micro-hardness) testing per "Rockwell C Hardness" Section, and no closer than 1 rod diameter from the ends of each rod.
11. Perform chemical analysis of broken rods at the threaded area and at the shank. Chemical tests to be performed as detailed in "Chemistry" Section.
12. Perform scanning electron microscopy - examination of fracture features on broken rods.
13. Perform Micro-structural examination of broken rods at the threaded area.
14. Analyze the chemistry of the coating and provide % of components. Include information on any % or trace amount of tin and bismuth.

DRAFT - IN PROGRESS

Revision No:	By:	Date:

SELF-ANCHORED SUSPENSION BRIDGE

Testing Protocol:
WET TEST

Drawn By:	BD	SHEET NUMBER	TP-04
Date:	5/17/2013		

SAS A354BD Bolts & Rods Tests

ID	Priority	Structural Component	Number of Bolts	Nominal Bolt Diameter [in]	Sustained Bolt Tension % Fu (UTS)	Number of Heats	Testing Plan - Number of samples to test			
							I (*in-situ* test)	II (lab test) (Note 1)	III (full size)	IV (test)
1	C	Shear Key Anchor Bolts- Bottom (S1/S2)	96	3	0.70	7	90	20	1	1 (1ft +/-)
2	A	Shear Key Anchor Bolts- Bottom (S3/S4)	96	3	0.70	1*	90	3	2**	2 (22ft +/-)
	A	Pier E2 Bearing Bolts- Bottom Housing (B1, B2, B3, B4)	96	3	0.70	1*	74	3	2**	3 (22ft +/-)
3	A	Shear Key Anchor Bolts-Top (S1/S2)	160	3	0.70	1*	160	3 (spares)	2 (spares)	-
	A	Shear Key Anchor Bolts-Top (S3/S4)	160	3	0.70	1*	160	3 (spares)	2 (spares)	-
4	A	Pier E2 Bearing Bolts- Top Housing (B1,B2,B3,B4)	224	2	0.70	1	224	7 (spares)	2 (spares)	1 (spare)
5	-	Spherical Bearing Bushing Assembly Bolts	96	1	0.61	1	-	-	-	-
6	-	Bearing Retainer Ring Plate Assembly Bolts	336	1	0.40	2	-	-	-	-
7	B	PWS Strand Anchor Rods (Main Cable)	274	3-1/2	0.32	17	274 (Note 2)	43	1 (spare)	3
8	C	Tower Saddle Tie Rods	25	4	0.68	1	25 (Note 3)	3 (Note 4)	1 (spare)	1 (spare)
9	D	Tower Saddle Turned Rods (@ Splices)	100	3	0.45	2	20	2 (Note 4)	-	-
	D	Tower Saddle Turned Rods (@ Splices)	8	3	0.10	1	-	-	-	-
10	D	Tower Saddle Grillage Bolts	90	3	0.10	1	-	-	-	-
11	D	Tower Outrigger	4	3	0.10	1	-	-	1 (spare)	-
12	C	Tower Anchorage Anchor Bolts (75 Dia. Anchor Bolts)	388	3	0.48	2	194	8 (Note 4)	1	1
13	C	Tower Anchorage Anchor Bolts (100 Dia. Anchor Bolts)	36	4	0.37	1	36	4 (Note 4)	-	-
14	D	East Saddle Anchor Rods	32	2	0.10	1	16	2 (Note 4)	1 (spare)	-
15	D	East Saddle Tie Rods	18	3	0.20	1	9	1	-	-
16	D	Cable Bracket Anchor Rods	24	3	0.16	1	12	1	-	-
17	D	Bikepath Anchor Bolts at Pier W2	43	1-1/4	0.10	1	9	1 (Note 4)	-	-

*Same Heat

** Tests completed

Notes:

1. Test at least one sample from each heat for Test II
2. Cut-off drill and tap hole @ end (~6") for access
3. Cut off machined hex @ end to get access
4. No Charpy tests due to limited available tail

DRAFT - IN PROGRESS

SAS A354BD Bolts & RodsTesting Program Draft Schedule

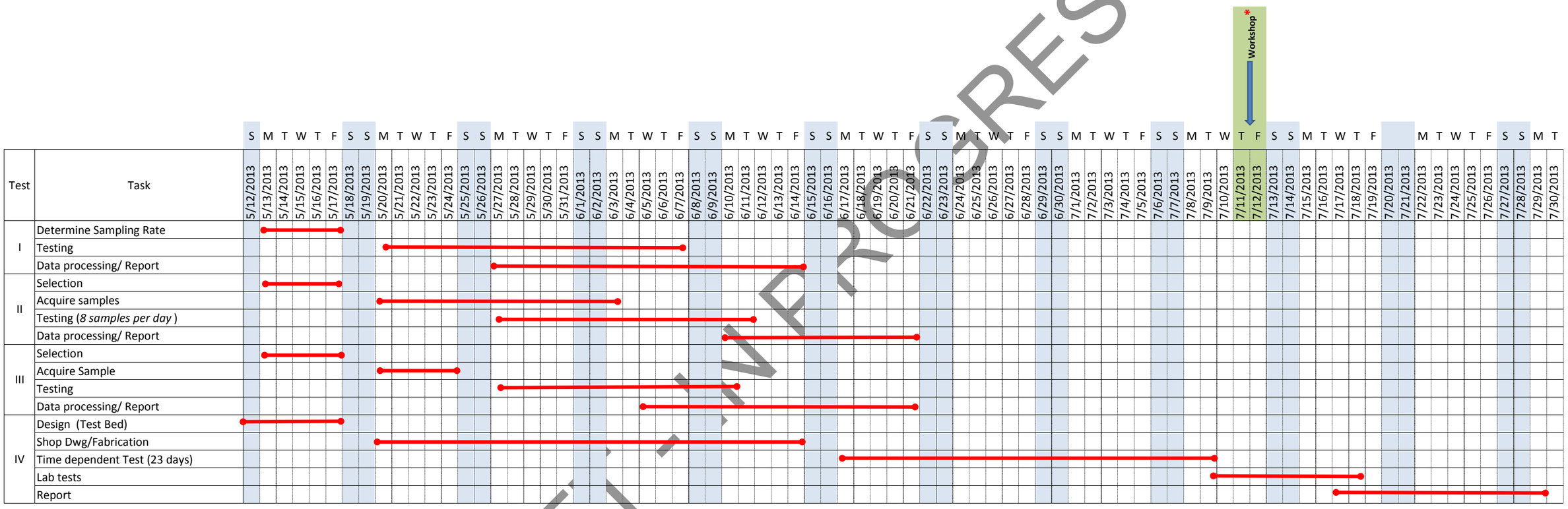

* Meeting/ Meeting/Workshop with Input from Bolt Consultants

H. Townsend	(CT/ TYLI/M&N JV)
K. Frank	(CT/ TYLI/M&N JV)
D. Williams	(CT/ TYLI/M&N JV)
R. Aguilar	(METS
S. Brahimi	(ABF JV))
A. Cavendish	(BATA)
J. Gorman	(BATA)

DRAFT - IN PROGRESS