DRAFT

17
BIKEPATH ANCHOR RODS

(2007-2009) – 43 Rods

Fabrication Process

TABLE OF CONTENTS
Bikepath Anchor Rod

2008-2009 TIMELINE

SPECIAL PROVISIONS AND CONTRACT PLAN SHEETS……. A
RFI REQUIRING ASTM A354 GRADE BD RODS……. B
MATERIAL ARRIVED TO DYSON FROM ASI……... C
TTML, DYSON, ART AND MODERN AUDITS.....…… D
NOTICE OF MATERIAL TO BE USED……. E
NOTICE OF MATERIAL TO BE FURNISHED……F
NON-CONFORMANCE REPORT DYSN-002……..G
NON-CONFORMANCE REPORT DYSN-003……. H
TRANSLAB TEST RESULTS……... I
NON-CONFORMANCE RESOLUTION DYSN-003……. J
RFI 1443 FIT-FOR-PURPOSE……K
NON-CONFORMANCE RESOLUTION DYSN-002…….. L
MATERIAL SUITABILITY DOCUMENTATION REPORT……..M
QA SAMPLING AT DYSON……... N
TRANSLAB TEST RESULTS……. O
SOURCE INSPECTION AT DYSON……..…….. P
6 RODS BLUE TAGGED FROM DYSON TO JOBSITE……..….Q
SHOP DRAWING SUBMITTAL……R
ADDITIONAL DOCUMENTS…….. S

ADDITIONAL DOCUMENTS

ASTM A123
ASTM A143
ASTM A153
ASTM A354
ASTM A490

Location and Item		Component Description	Rod (no head) or Bolt (with head)	Threads Cut or Rolled	Supplier	Diameter (in)	Overall Length (ft)	Overall Length (mm)	Quantity Installed (not including spares)	De-Humidified Zone?	Tighten Method	Final Tension (fraction of Fu or UTS)	Date Tension or Loading Complete	Date Re-Inspected (by 4/8/13)	Date Re-Inspected (by 4/23/13)	Date Re-Inspected (by 5/5/13)	Notes
E2 Bearings and Shear Keys	1	E2 Shear Key - Connect to Concrete - Above Column, Under OBG [S1, S2]	rod	Cut	Dyson	3	17.2	5235	60 } 96	No	Tension	0.7	3/5/2013	daily check	daily check	daily check	Tensioned to 0.75 Fy, with lockoff at ~ 0.7 Fu 32 of 96 rods broke after tensioning, then tension level lowered
							10.0	3035	36								
	2	E2 Shear Key - Connect to Concrete - Above Bent Cap, Under Crossbeam [S3, S4]	rod	Cut	Dyson	3	21.9	6676	96 } 192	No	Tension	0.7	4/1/2013	daily check	daily check	daily check	Tensioned to 0.75 Fy, with lockoff at ~ 0.7 Fu
		E2 Bearing - Connect to Concrete - Under OBG [B1, B2, B3, B4]	rod	Cut	Dyson	3	22.6	6902	64		Tension	0.7	4/9/2013	daily check	daily check	daily check	Tensioned to 0.75 Fy, with lockoff at ~ 0.7 Fu
							22.2	6777	32								
	3	E2 Shear Key - Connect to OBG [S1, S2]	rod	Cut	Dyson	3	4.4	1337	96 } 320	No	Tension	0.7	9/12/2012	4/6/2013 4/8/2013	4/17/13 to 4/23/13	5/3/2013	Tensioned to 0.75 Fy, with lockoff at ~ 0.7 Fu
							1.8	537	64								
		E2 Shear Key - Connect to Crossbeam [S3, S4]	rod	Cut	Dyson	3	4.3	1312	96								
							1.7	512	64								
	4	E2 Bearing - Connect to OBG [B1, B2, B3, B4]	rod	Cut	Dyson	2	3.6	1105	224	No	Tension	0.7	9/12/2012	4/6/2013	4/17/13 to 4/23/13	5/3/2013	Tensioned to 0.75 Fy, with lockoff at ~ 0.7 Fu
	5	E2 Bearing Assembly Bolts (Spherical Bushing Halves)	rod	Cut	Dyson for Lubrite for Hochang	1	2.4	733	96	No	Tension	0.61	July 2009	not accessible	not accessible	not accessible	Connect 2 halves of the spherical bushing assembly housing together at Lubrite; rods are internal to bearings and **all rods are not accessible** after bearing assembly at Hochang (December 2009 & January 2010); rods tensioned to 0.7 Fy.
	6	E2 Bearing Assembly Bolts (Retaining Rings)	Socket Head Cap Screw	Cut	Dyson for Hochang	1	0.2	55	336	No	snug + 1/4 turn	~0.4	January 2010	4/6/2013 (for 32 accessible bolts)	4/23/2013 (for 32 accessible bolts)	5/3/2013 (for 32 accessible bolts)	Bolts thread into drill and tap holes to attach retaining rings that secure the Lubrite spherical bushing assembly in the bottom housing; bolts are mechanically galvanized, not hot dip galvanized; bolts are internal to bearings and not accessible after bearing assembly at Hochang, except for a small number of bolts in limited areas -> **32 of 336 bolts are accessible**.
Cable Anchorage	7	PWS Anchor Rods - PWS Socket to Anchorage	rod	55 Cut (20%) 219 Rolled (80%)	Dyson	3-1/2	27.9 to 31.8	8500 to 9700	274	Yes	Load Transfer	0.26	9/26/2012	4/6/2013	4/20&22/2013	5/4/2013	With DL after load transfer (current condition)
												0.29	N/A	N/A	N/A	N/A	With DL + Added DL
												0.32	N/A	N/A	N/A	N/A	Service Load (Group 1)
												0.35	N/A	N/A	N/A	N/A	SEE (Seismic)
Top of Tower	8	Tower Saddle Tie Rods	rod	Rolled	Dyson	4	6.0 to 17.5	1840 to 5325	25	Yes	Tension	0.41	7/14/2012	N/A	N/A	N/A	Load During Construction - Tensioned to 0.5 Fy
												0.68	N/A	4/6/2013	4/19/2013	5/3/2013	Additional tension in tie rods from cable with service load
	9	Turned Rods at Tower Saddle Segment Splices	rod	Cut	Dyson	3 @ Threads [~3-1/16 @ Shank]	1.5	463	100 } 108	Yes	Tension	0.45	4/6/2011	4/6/2013	4/19/2013	5/3/2013	Located at the 2 field splices connecting the 3 tower saddle segments; 100 rods tensioned prior to saddle erection; 8 rods only snug tight after tie rod tensioning due to conflict with tie rods.
							1.4	415	8		snug	~0.1	7/14/2012				
	10	Tower Saddle to Grillage Anchor Bolts	Hex Bolt	Cut	Dyson	3	1.2	360	90	Head Yes, Nut No	snug	~0.1	3/25/2013	4/6/2013	4/19/2013	5/3/2013	Snug tightened before and after load transfer: **Initial Tension complete on 5/20/2011**; final tension complete on 3/25/2013.
	11	Tower Outrigger Boom (for Maintenance) at Top of Tower	Hex Bolt	Cut	Dyson	3	2.1	630	4	No	snug	~0.1	July 2012	4/6/2013	4/19/2013	5/4/2013	Act as pins for swinging out and then securing the maintenance outrigger boom at the top of 2 of 4 tower head chimneys. At each boom, one bolt is loaded and other bolt is unloaded in the current boom position. The currently unloaded bolt will be installed snug tight when the boom is swung out for use (future position).
Bottom of Tower	12	Tower Anchor Rods - Tower at Footing (3" Dia)	rod	Cut	Vulcan Threaded Products for KOS for KFM (04-0120E4)	3	25.6	7789	388	Yes	Tension	0.48	4/17/2013	N/A	4/20/2013 4/22/2013	5/5/2013	Tensioned to 1800 kN = 404.7 kips; Tension before and after load transfer: Initial Tension Late 2010 through Early 2011; Final Tension 2013
	13	Tower Anchor Rods - Tower at Footing (4" Dia)	rod	Cut		4	25.7	7839	36	Yes	Tension	0.37	4/17/2013	N/A	4/20/2013 4/22/2013	5/5/2013	Tensioned to 2530 kN = 568.8 kips; Tension before and after load transfer: Initial Tension Late 2010 through Early 2011; Final Tension 2013
East Saddles	14	East Saddle Anchor Rods	rod	Cut	Dyson for JSW	2	2.6	800	32	Yes	snug	~0.1	May 2010	4/7/2013	4/21/2013	5/3/2013	specified gap under nut/washer at one end of rod and 2 nuts snug against each other at other end of rod -> snug tight for portion of rod
	15	East Saddle Tie Rods	Hex Bolt	Cut	Dyson	3	4.7	1420	18	Yes	snug	~0.1	4/13/2012	N/A	N/A	N/A	Snug tightened before load transfer
												0.2	N/A	4/7/2013	4/21/2013	5/3/2013	Additional tension in tie rods from cable with service load
East Cable	16	B14 Cable Bands - Cable Brackets - at East End of Bridge - Strongback Anchor Rods	rod	Rolled	Dyson	3	10.3 to 11.1	3129 to 3372	24	No	Tension	0.16	2/8/2013	4/7/2013	4/21/2013	5/4/2013	pre-compress neoprene between strongback and cable band
W2 Bent Cap	17	W2 Bikepath Anchor Rods	rod	Cut	Dyson	~1-3/16 [Metric M30]	1.5	460	43	No	Not Determined Yet		N/A	N/A	N/A	N/A	Details for bikepath connections are being redesigned and are not final. The 18 anchor rods at the bottom connections will be abandoned. The 25 anchor rods at the top connections will be used and supplemented with additional anchor rods. These rods will be tensioned on the separate YBITS-2 Contract.

Total = 2306

New information after 5/6/2013 Update is highlighted Red

STATE OF CALIFORNIA

DEPARTMENT OF TRANSPORTATION

NOTICE TO CONTRACTORS

AND

SPECIAL PROVISIONS

FOR CONSTRUCTION ON STATE HIGHWAY IN

SAN FRANCISCO COUNTY IN SAN FRANCISCO

FROM 0.6 KM TO 1.3 KM EAST OF THE YERBA BUENA TUNNEL EAST PORTAL

DISTRICT 04, ROUTE 80

For Use in Connection with Standard Specifications Dated JULY 1999, Standard Plans Dated JULY 1999, and Labor Surcharge and Equipment Rental Rates.

CONTRACT NO. 04-0120F4

04-SF-80-13.2/13.9

Bids Open: February 1, 2006
Dated: August 1, 2005

OSD

persons or entities hired by subcontractors who will provide other services or materials for the project, and shall have the following:

A. A tensile testing machine capable of breaking the largest size of reinforcing bar to be tested.
B. Operators who have received formal training for performing the testing requirements of ASTM Designation: A 970/A 970M.
C. A record of annual calibration of testing equipment performed by an independent third party that has 1) standards that are traceable to the National Institute of Standards and Technology, and 2) a formal reporting procedure, including published test forms.

The Engineer shall be notified in writing when any lots of headed bar reinforcement are ready for testing. The notification shall include the number of lots to be tested and the location where the tests are to be conducted. After notification has been received, test samples will be randomly selected by the Engineer from each production lot of headed bar reinforcement which is ready for shipment to the jobsite. If epoxy coating is required, test samples will be taken after the headed bar reinforcement has been prepared for epoxy coating. The Engineer will be at the testing site within a maximum of one week after receiving written notification that the samples are at the testing site and ready for testing. In the event the Engineer fails to be present at the testing site within the time allowed, and if, in the opinion of the Engineer, completion of the work is delayed or interfered with by failure of the Engineer to be present at the testing site, the Contractor will be compensated for any resulting loss in the same manner as provided for in Section 8-1.09, "Right of Way Delays," of the Standard Specifications.

A minimum of 3 samples from each production lot shall be tested. One tensile test shall be conducted on each sample.

Tensile tests shall conform to the requirements specified in ASTM Designation: A 970/A 970M, Section 7, except that at rupture, there shall be visible signs of necking in the reinforcing bar 1) at a minimum distance of one bar diameter away from the head to bar connection for friction welded headed bar reinforcement, or 2) outside the affected zone for integrally forged headed bar reinforcement.

The affected zone for integrally forged headed bar reinforcement is the portion of the reinforcing bar where any properties of the bar, including the physical, metallurgical, or material characteristics, have been altered during the manufacturing process.

If one of the test specimens fails to meet the specified requirements, one retest shall be performed on one additional sample, selected by the Engineer, from the same production lot. If the additional test specimen, or if more than one of the original test specimens fail to meet these requirements, all headed bar reinforcement in the lot represented by the tests will be rejected in conformance with the provisions in Section 6-1.04, "Defective Materials," of the Standard Specifications.

A Production Test Report for all testing performed on each lot shall be prepared by the independent testing laboratory and submitted to the Engineer as specified herein. The report shall be signed by an engineer who represents the laboratory and is registered as a Civil Engineer in the State of California. The report shall include the following information for each set: contract number, bridge number, lot number, bar size, type of headed bar reinforcement, physical conditions of test sample, any notable defects, limits of affected zone, location of visible necking area, and the ultimate strength of each headed bar.

Each unit of headed bar reinforcement in a production lot to be shipped to the site shall be tagged in a manner such that production lots can be accurately identified at the jobsite. All unidentified headed bar reinforcement received at the jobsite will be rejected.

MEASUREMENT AND PAYMENT

Full compensation for headed bar reinforcement shall be considered as included in the contract price paid per kilogram for bar reinforcing steel (bridge) and no separate payment will be made therefor.

Full compensation for epoxy-coated headed bar reinforcement shall be considered as included in the contract price paid per kilogram for bar reinforcing steel (epoxy-coated) (bridge) and no separate payment will be made therefor.

10-1.59 STEEL STRUCTURES

Construction of steel structures shall conform to the provisions in Section 55, "Steel Structures," of the Standard Specifications and these special provisions.

Fabricators and suppliers shall be certified under the AISC Quality Certification Program, Category Cbr, Major Steel Bridges, with endorsement F, Fracture Critical members, except that certification will not be required for fabrication of the tower strut façade and tower skirt. Alternatively, ISO 9001:2000 certification standard may be substituted for the AISC Quality Certification Program.

Details of box girder and crossbeam connections shall conform to the AASHTO Standard Specifications for Highway Bridges, unless otherwise shown on the plans.

Attention is directed to "Accelerated Working Drawings Submittal," of these special provisions.

A. Minimum tension shall be verified using the "Pre-Installation Verification Turn-of-the-Nut Method," of the "Structural Bolting Handbook," published by the Steel Structures Technology Center, Incorporated, except that the required rotation shall be as given in Table 8.2. of this section and the required tension shall be as shown in the following table:

Pre-Installation Verification
Required Tension, N*

Bolt Size, mm	A325M Bolts	A490M Bolts
M16	96 000	120 000
M20	149 000	188 000
M22	185 000	232 000
M24	215 000	270 000
M27	280 000	351 000
M30	342 000	428 000
M36	499 000	625 000
*The above values are 5% higher than the required pretension values used for design, actual installation and inspection, rounded to the nearest kN.		

B. Rotational-capacity tests in accordance with the requirements in Section 11.5.6.4.2 "Rotational-Capacity Tests," of the AASHTO LRFD Bridge Construction Specifications, except that Table 11.5.6.4.1-2 "Nut Rotation from the Snug Condition," is replaced by Table 8.2. of this section.

Test results shall confirm both the minimum bolt tension and the rotational capacity of the bolts. If either test fails, the Contractor shall modify the nut rotation in Table 8.2. of this section until the requirements of both tests are satisfied. No adjustment in compensation will be allowed for modifications to the nut rotations as necessary to satisfy test requirements. Revisions to Table 8.2. shall be approved by the Engineer prior to bolting operations.

The Engineer will randomly sample and perform quality assurance testing of high strength fasteners. Samples will be obtained at locations chosen by the Engineer. The Contractor shall provide the number of bolts specified below to the Engineer for quality assurance testing:

Bolt Sampling Size

Lot Size (No. of Bolts)	Sample Size (No. of Bolts)
2 to 15	3
16 to 25	4
26 to 50	5
51 to 90	7
91 to 150	8
151 to 280	9
281 to 10,000	12
10,001 to 500,000	16
500,001 and over	20

Steel fasteners, designated on the plans as A 354, Grade BC, and A 354, Grade BD, shall conform to the requirements of ASTM Designation: A 354. Steel fastener components for steel fasteners designated as A 354 shall include a bolt, nut and hardened washer. Nuts for steel fasteners designated as A 354 shall conform to Section 55-2.01, "Description," of the Standard Specifications.

Steel fasteners designated on the plans as A 354, Grade BD shall be dry blast cleaned in accordance with the provisions of Surface Preparation Specification No. 10, "Near White Blast Cleaning," of the "SSPC: The Society for Protective Coatings.

Steel fasteners designated on the plans as A 354, Grade BC, and A 354, Grade BD, shall be galvanized in accordance with the requirements in Section 75-1.05, "Galvanizing," of the Standard Specifications and shall conform to the requirements in ASTM Designation: A123 for bolts and ASTM Designation: A153 for nuts and hardware. Steel fastener assemblies designated as A354, Grade BD, shall be galvanized within 4 hours of being dry blast cleaned.

The Contractor shall submit certified test reports showing that the A 354, Grade BD fasteners conform to the provisions in ASTM Designation: A 143.

Steel fasteners, designated on the plans as A 354, Grade BC, and A 354, Grade BD, shall conform to the requirements of ASTM Designation: A 354. Steel fastener components for steel fasteners designated as A 354 shall include a bolt, nut and hardened washer. Nuts for steel fasteners designated as A 354 shall conform to Section 55-2.01, "Description," of the Standard Specifications. Nuts shall be zinc coated and be furnished with a dry lubricant conforming to Supplementary Requirement S1 and S2 in ASTM Designation: A 563.

Steel fasteners designated on the plans as A 354, Grade BD shall be tensioned not less than the value shown on the plans. Prior to installation, the Contractor shall submit to the Engineer for approval the methods and equipment to be used to tension steel fasteners designated as A354, Grade BD in accordance with Section 55-1.02, "Drawings," of the Standard Specifications. Working drawings shall include methods and equipment to be used to evaluate: 1) the presence of a lubricant, 2) the efficiency of the lubricant, and 3) the compatibility of the high strength steel bolt, nut and hardened washer.

Except where sub-punching is permitted, bolt holes shall be drilled or reamed, unless otherwise shown on the plans.

Punching

The first paragraph of Section 55-3.14A(1) "Punching," of the Standard Specifications shall not apply.

Punching or sub-punching of Grade 250 structural steel where the material is thicker than 16 mm will not be permitted. Punching or sub-punching of high-strength structural steel where the material is thicker than 12 mm will not be permitted.

Prestressing High-Strength Bolts

High-strength A354 bolts shall be tensioned by means of hydraulic jacks so that the force in the bolts shall not be less than the value shown on the plans.

The maximum temporary tensile stress (jacking stress) in high-strength bolts shall not exceed 75 percent of the specified minimum ultimate tensile strength of the material. Prestressing forces in high-strength bolts shall consider all losses, including creep of steel, losses due to sequence of stressing, and other losses specific to the method or system of prestressing used by the Contractor.

Hydraulic jacks used for prestressing high-strength bolts shall be calibrated in accordance with the requirements in Section 50-1.08, "Prestressing," of the Standard Specifications.

Final prestressing high strength A354 bolts at the tower anchorage shall be performed after the full dead load is transferred to the cable system.

ASSEMBLY

The method of erection of the suspended structure and tower shall be determined by the Contractor to meet the seismic design load criteria and ensure control of box girder and tower deflections due to wind induced oscillations.

The Contractor shall carry out the necessary structural analyses for the erection procedure to demonstrate the adequacy of the procedure. Details of these analyses and of any supplementary damping or other measures shall be submitted to the Engineer for review and approval.

Wind pressure effects during erection shall be calculated using a gust wind appropriate to a return period of not less than 25 years and shall allow for variation of speed with height per ANSI ASCE 7-95. The 25-year wind corresponds to a 77 mph one-hour average wind speed (and a corresponding 3-second gust wind speed of 100 mph) at deck elevation of 50 meters, as well as a critical flutter wind speed threshold of 112 mph based on a 1000-year return period. The Contractor shall provide temporary connections between adjacent lift sections in order to ensure sufficient torsional stiffness of the suspended structure. The Contractor shall also provide the proper support of the suspended structure during all stages of erection. The Contractor shall similarly ensure control of tower deflections due to wind-induced oscillations at all stages of erection and shall provide holdback stays or other damping devices as necessary. All such temporary measures shall be approved by the Engineer.

Wind design loads may be reduced during lifting operations.

Seismic loading during erection shall conform to the seismic loading requirements specified in "TEMPORARY TOWERS," subsection "TEMPORARY TOWER DESIGN," subsection "Seismic Design Loads," of these special provisions.

The erection procedure shall be such that the maximum stresses in any part of the permanent structure do not cause any permanent deformation or damage. Appropriate values of loads and safety factors for erection loading conditions shall be submitted by the Contractor to the Engineer for review and approval.

The details of any fastenings which the Contractor may require in any part of the permanent works for erection, and the procedure for their removal, shall be submitted to the Engineer for approval.

Tower

Tower lifts shall be in lengths as indicated on the plans. Exterior plates of the tower shafts shall be fabricated with direction of rolling aligned along the vertical direction of the tower. Within each lift, the number of transverse splices of the

DIST.	COUNTY	ROUTE	KILOMETER POST TOTAL PROJECT	SHEET NO.	TOTAL SHEETS
04	SF	80	13.2/13.9	829R6	1204

REGISTERED ENGINEER - CIVIL

12-6-04
PLANS APPROVAL DATE

The State of California or its officers or agents shall not be responsible for the accuracy or completeness of electronic copies of this plan sheet.

REGISTERED PROFESSIONAL ENGINEER Tien Hung Ho No. C 43990 Exp. 6/30/13 CIVIL STATE OF CALIFORNIA

T.Y. LIN / MOFFATT & NICHOL
825 BATTERY STREET
SAN FRANCISCO, CA 94111

Caltrans now has a web site! To get to the web site, go to: http://www.dot.ca.gov

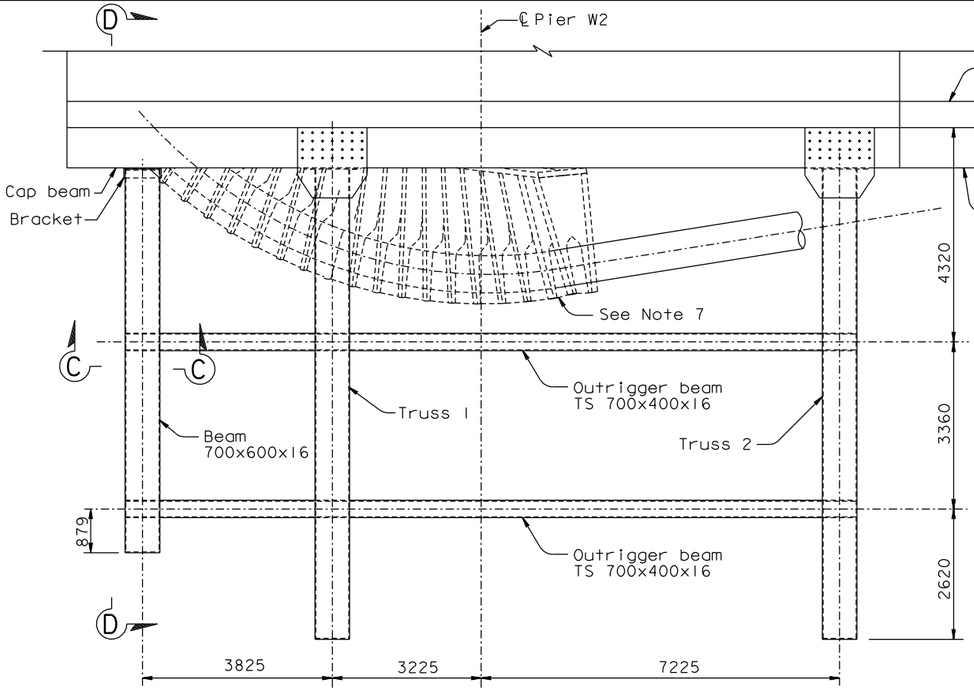

BIKEPATH PARTIAL PLAN AT CAP BEAM
1:60
NOTE: Stringer not shown, for clarity

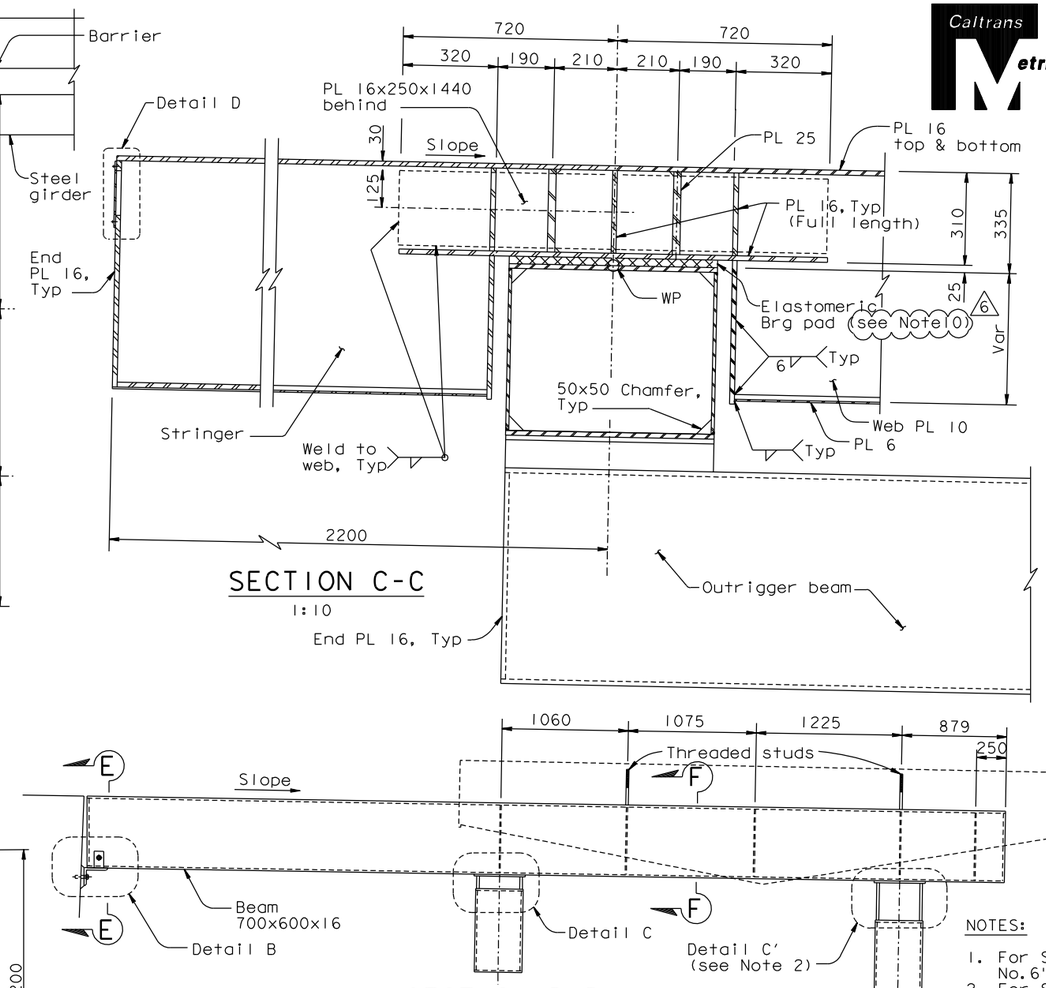

SECTION C-C
1:10

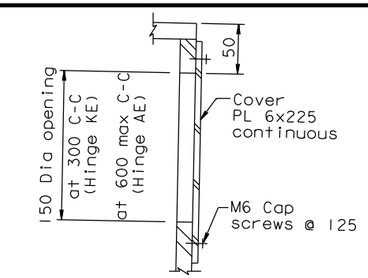

DETAIL D
1:3

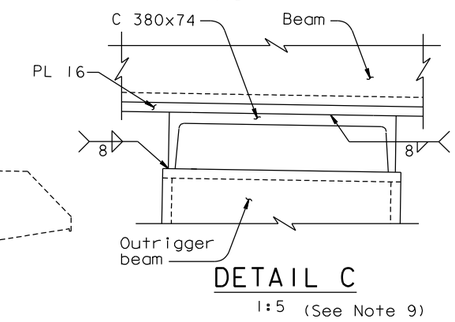

DETAIL C
1:5 (See Note 9)

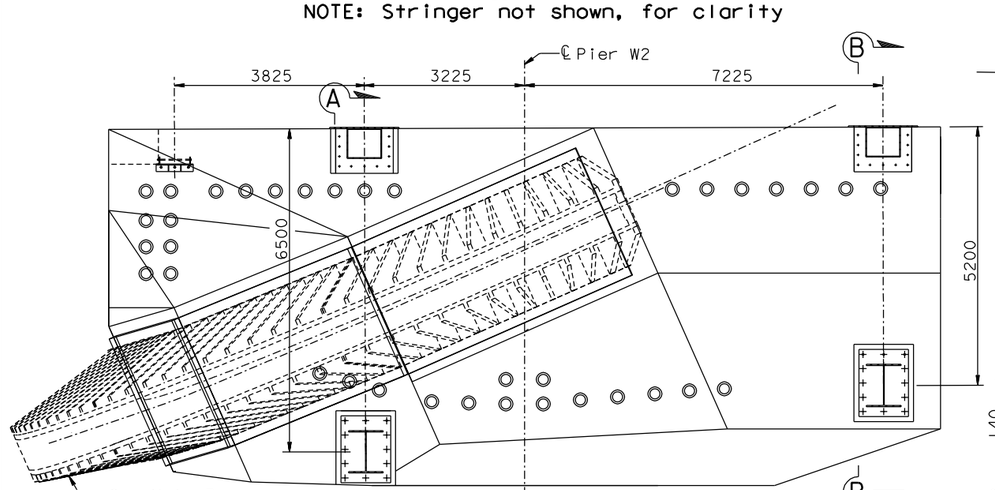

BIKEPATH SIDE VIEW
1:60

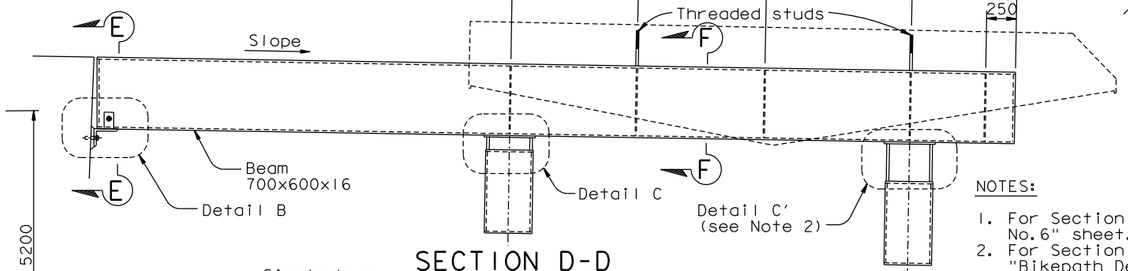

SECTION D-D
1:25

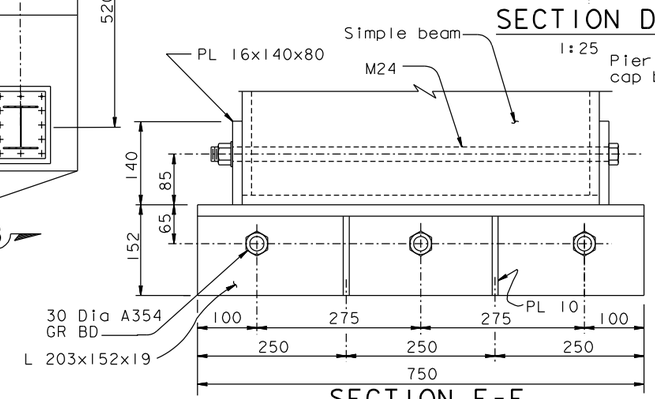

SECTION E-E
1:5

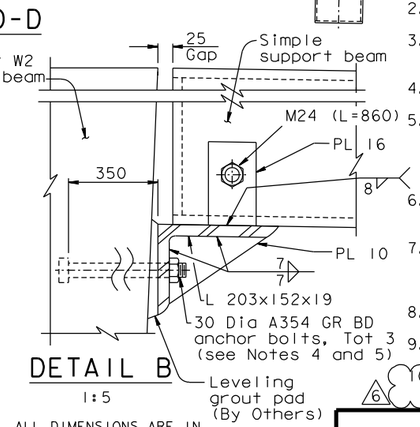

DETAIL B
1:5

ALL DIMENSIONS ARE IN MILLIMETERS UNLESS OTHERWISE SHOWN

NOTES:

1. For Section A-A, see "Bikepath Details No.6" sheet.
2. For Section B-B and Detail C', see "Bikepath Details No.7" sheet.
3. Cantilever Truss 1, Truss 2 and outrigger beams to be installed by Others after demolition of existing structure.
4. The tolerance for placement of the anchor bolts is ±25 mm.
5. The Contractor shall survey the as-built anchor bolt locations and prepare a template. This template shall be trial fit in the field prior to drilling the holes in the angle.
6. The Contractor shall furnish all anchor bolt components and shall provide corrosion protection covering exposed ends.
7. Views of the deviation saddle are for illustration only. For deviation saddle details, see "West Deviation Saddle Details" sheets.
8. For Section F-F, see "Bikepath Details No. 4A" sheet.
9. At the Contractor's option, Detail C' may be used in lieu of Detail C.
10. For leveling shim details at stud locations, see "Bikepath Details No.23" sheet.

REQUESTS FOR INFORMATION NOT ADDRESSED IN THIS CCO REMAIN IN FORCE

MARK	DATE	DESCRIPTIONS	BY	CH'D	CCO#
6	08/17/12	BIKEPATH LEVELING	AB	TH	228SI
5	02/16/11	MISCELLANEOUS BIKEPATH DETAILS	CC	TH	172
4	01/25/11	BIKEPATH STUD ISSUE	TH	CC	186
3	11/12/10	MISCELLANEOUS BIKEPATH DETAILS	CC	TH	172
2	08/20/10	BIKEPATH DETAILS	CC	TH	99
1	05/04/07	W2 CAP BEAM ISD RESOLUTION	AS	TH	34SI

REVISIONS

CONTRACT CHANGE ORDER NO. ____
SHEET ____ OF ____

R. Valizadeh/V. Toan/Y.L./W.L./F.C.
DESIGN OVERSIGHT
SIGN OFF DATE 08/17/12

	BY	CHECKED
DESIGN	T. Ho	T. McMeans
DETAILS	R. Xu	P. Ritchie
QUANTITIES	C. Bernardo	S. Shi

PREPARED FOR THE STATE OF CALIFORNIA DEPARTMENT OF TRANSPORTATION

R. Manzanarez
PROJECT ENGINEER

BRIDGE NO. 34-0006L/R
KILOMETER POST 13.2/13.9

SAN FRANCISCO OAKLAND BAY BRIDGE
EAST SPAN SEISMIC SAFETY PROJECT
SELF-ANCHORED SUSPENSION BRIDGE
(SUPERSTRUCTURE & TOWER)

BIKEPATH DETAILS NO.5

Rev. Date: 5-18-98

ORIGINAL SCALE IN MILLIMETERS FOR REDUCED PLANS 0 10 20 30 40 50 60 70 80 90 100

CU 04
EA 0120F1

DISREGARD PRINTS BEARING EARLIER REVISION DATES

REVISION DATES (PRELIMINARY STAGE ONLY) 05/31/01 04/08/02 07/01/02 12/19/02 09/08/04 11/13/05

SHEET 412R6 OF

FILE => I:\bb\04-012001\sas\contract plans and cco\cco\cco#228SI\I-original 08-17-12\dgn\agbwd05.dgn

USERNAME => DWinrow DATE PLOTTED => 17 AUG 2012 TIME PLOTTED => 13:39:46

100% PS&E

DIST.	COUNTY	ROUTE	KILOMETER POST TOTAL PROJECT	SHEET NO.	TOTAL SHEETS
04	SF	80	13.2/13.9	830R3	1204

REGISTERED ENGINEER - CIVIL

12-6-04
PLANS APPROVAL DATE

The State of California or its officers or agents shall not be responsible for the accuracy or completeness of electronic copies of this plan sheet.

REGISTERED PROFESSIONAL ENGINEER Tien Hung Ho No. C 43990 Exp. 6/30/11 CIVIL STATE OF CALIFORNIA

T.Y. LIN / MOFFATT & NICHOL
825 BATTERY STREET
SAN FRANCISCO, CA 94111

Caltrans now has a web site! To get to the web site, go to: http://www.dot.ca.gov

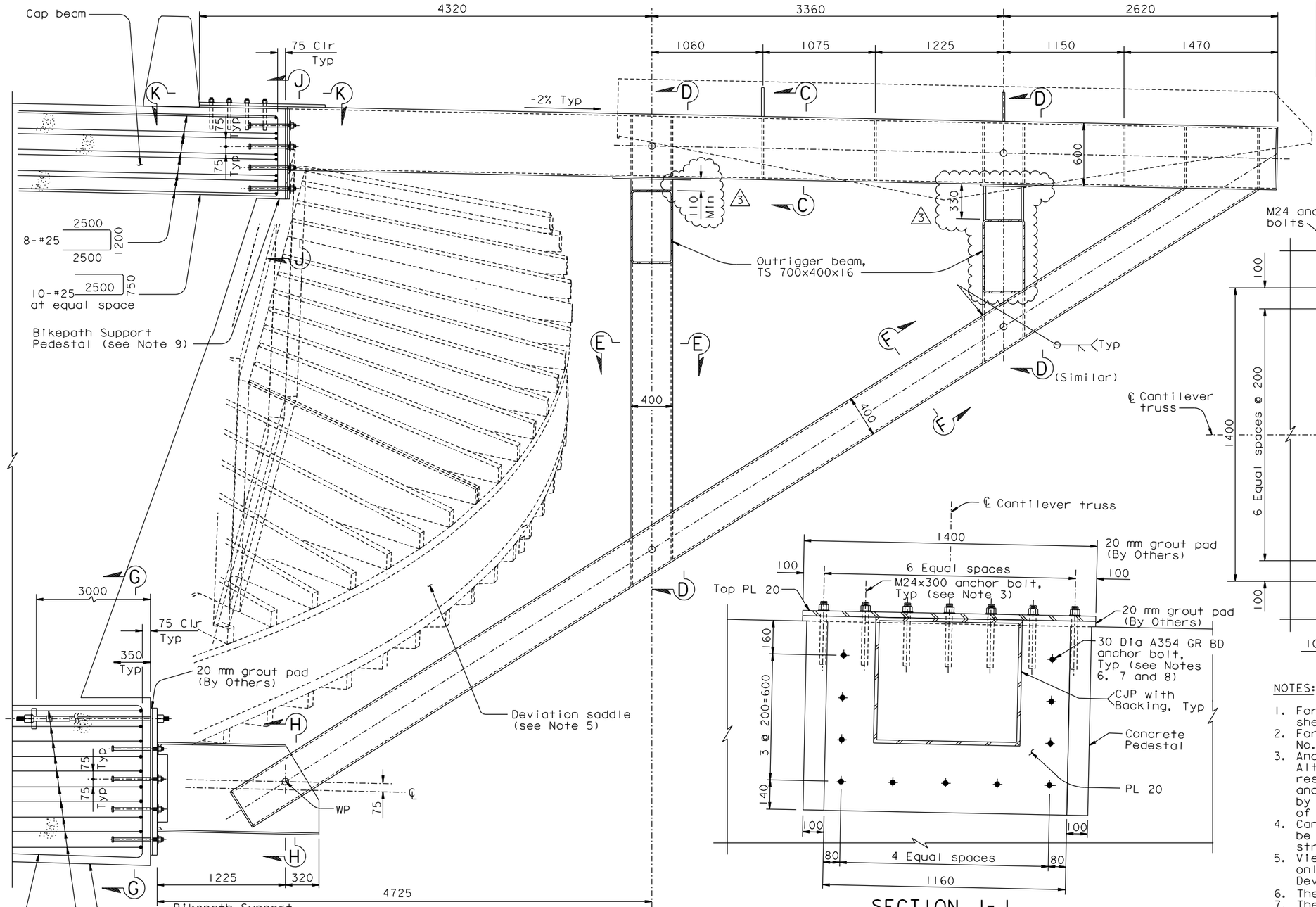

SECTION A-A
1:20

SECTION J-J
1:10

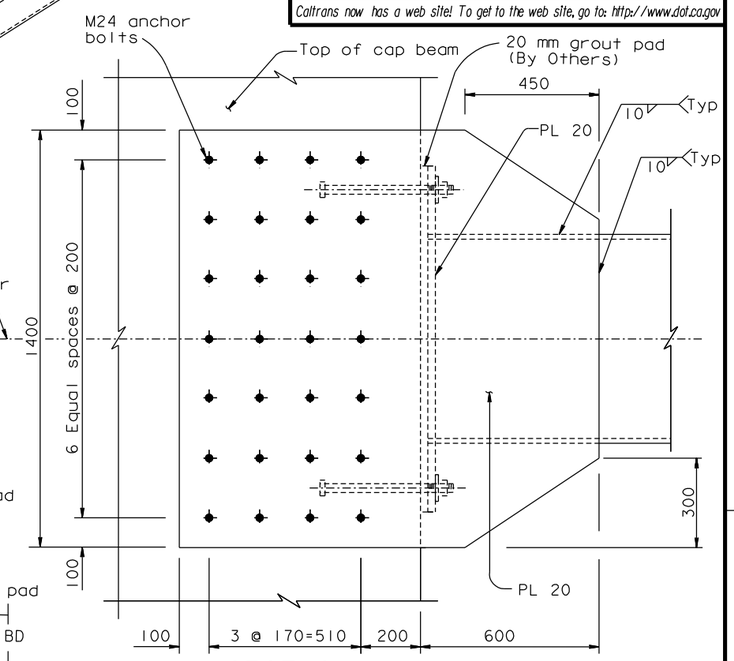

SECTION K-K
1:10

NOTES:

1. For outrigger beams, see "Bikepath Details No. 8" sheet.
2. For Sections C-C through H-H, see "Bikepath Details No. 8" sheet.
3. Anchor bolts shall be ASTM A345 Gr BC and grouted. Alternatively, the Contractor may provide M24x290 resin capsule anchors. Contractor shall furnish anchor bolts and core holes for their installation by Others. Installation of anchor bolts is not part of this contract.
4. Cantilever Truss 1, Truss 2 and outrigger beams to be installed by Others after demolition of existing structure.
5. Views of the deviation saddle are for illustration only. For deviation saddle details, see "West Deviation Saddle Details" sheets.
6. The tolerance for placement of anchor bolts is 25 mm.
7. The Contractor shall survey the as-built anchor bolt locations and prepare a template. This template shall be trial fit in the field prior to drilling the holes in the base plate.
8. The Contractor shall furnish all anchor bolt components and shall provide corrosion protection covering exposed ends.
9. The Contractor may pour the Bikepath Support Pedestals in two stages to suit his means and methods. Details shall be submitted to the Engineer for review and approval.

ALL DIMENSIONS ARE IN MILLIMETERS UNLESS OTHERWISE SHOWN

CONTRACT CHANGE ORDER NO. _____
SHEET ___ OF ___

REQUESTS FOR INFORMATION NOT ADDRESSED IN THIS CCO REMAIN IN FORCE

MARK	DATE	DESCRIPTIONS	BY	CH'D	CCO#
3	11/12/10	MISCELLANEOUS BIKEPATH DETAILS	CC	TH	172
2	08/20/10	BIKEPATH DETAILS	CC	TH	99
1	05/04/07	W2 CAP BEAM ISD RESOLUTION	JD	TH	34S1

REVISIONS

R. Valizadeh/V. Toan/Y.L./W.L./F.C.
DESIGN OVERSIGHT
SIGN OFF DATE 11/12/10

	BY	CHECKED
DESIGN	T. Ho	T. McMeans
DETAILS	R. Xu	P. Ritchie
QUANTITIES	C. Bernardo	S. Shi

PREPARED FOR THE STATE OF CALIFORNIA DEPARTMENT OF TRANSPORTATION

R. Manzanarez
PROJECT ENGINEER

BRIDGE NO. 34-0006L/R
KILOMETER POST 13.2/13.9

SAN FRANCISCO OAKLAND BAY BRIDGE
EAST SPAN SEISMIC SAFETY PROJECT
SELF-ANCHORED SUSPENSION BRIDGE
(SUPERSTRUCTURE & TOWER)

BIKEPATH DETAILS NO. 6

Rev. Date: 5-18-98

ORIGINAL SCALE IN MILLIMETERS FOR REDUCED PLANS 0 10 20 30 40 50 60 70 80 90 100

CU 04
EA 0120F1

DISREGARD PRINTS BEARING EARLIER REVISION DATES

REVISION DATES (PRELIMINARY STAGE ONLY): 05/31/01 04/08/02 07/01/02 12/19/02 09/08/04 11/13/05

SHEET 413R3 OF

FILE => I:\bb\04-012001\sas\contract plans and cco\cco\cco#172\1-original 11-12-10\dgn\agbwd06.dgn

USERNAME => DWinrow DATE PLOTTED => 12 NOV 2010 TIME PLOTTED => 11:42:00

100% PS&E

DIST.	COUNTY	ROUTE	KILOMETER POST TOTAL PROJECT	SHEET NO.	TOTAL SHEETS
04	SF	80	13.2/13.9	831R3	1204

Caltrans Metric

REGISTERED ENGINEER - CIVIL

12-6-04
PLANS APPROVAL DATE

REGISTERED PROFESSIONAL ENGINEER Tien Hung Ho No. C 43990 Exp. 6/30/11 CIVIL STATE OF CALIFORNIA

The State of California or its officers or agents shall not be responsible for the accuracy or completeness of electronic copies of this plan sheet.

T.Y. LIN / MOFFATT & NICHOL
825 BATTERY STREET
SAN FRANCISCO, CA 94111

Caltrans now has a web site! To get to the web site, go to: http://www.dot.ca.gov

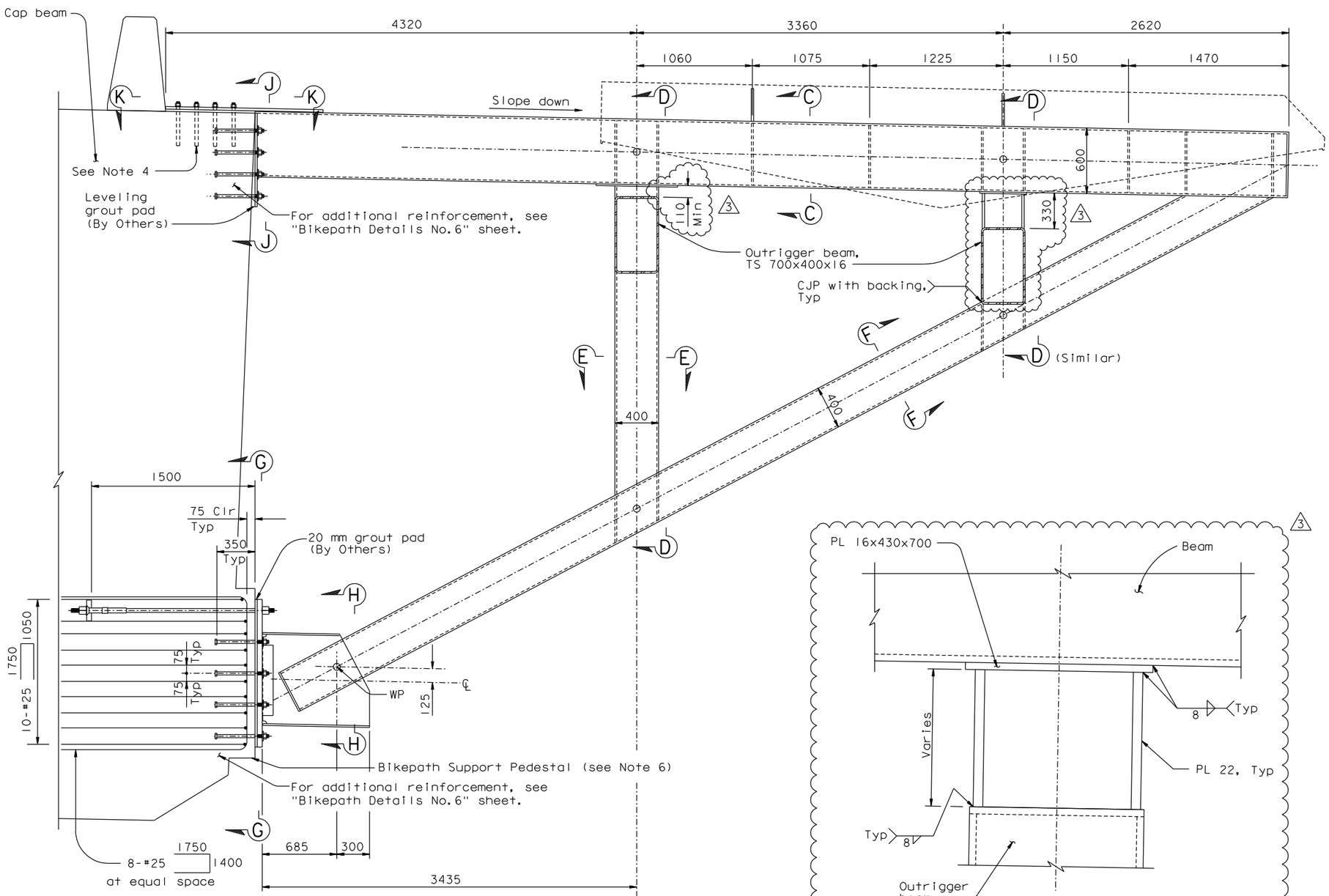

SECTION B-B Cantilever truss (Between PP 7 & PP 8)
1:20

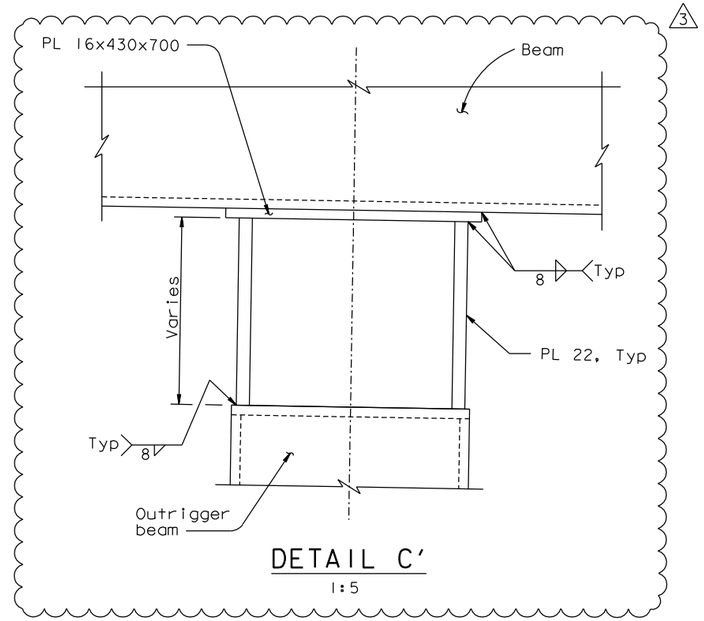

DETAIL C'
1:5

NOTES:

1. For outrigger truss, see "Bikepath Details No. 8" sheet.
2. For Sections J-J and K-K, see "Bikepath Details No. 6" sheet.
3. For Sections C-C through H-H, see "Bikepath Details No. 8" sheet.
4. Anchor bolts shall be ATM A345 Gr BC and grouted. Alternatively, the Contractor may provide M24x290 resin capsule anchors. Contractor shall furnish anchor bolts and core holes for their installation by Others. Installation of anchor bolts is not part of this Contract.
5. Cantilever Truss 1, Truss 2 and outrigger beam to be installed by Others after demolition of existing structure.
6. The Contractor may pour the Bikepath Support Pedestals in two stages to suit his means and methods. Details shall be submitted to the Engineer for review and approval.

CONTRACT CHANGE ORDER NO. _____
SHEET ___ OF ___

REQUESTS FOR INFORMATION NOT ADDRESSED IN THIS CCO REMAIN IN FORCE

MARK	DATE	DESCRIPTIONS	BY	CH'D	CCO#
3	11/12/10	MISCELLANEOUS BIKEPATH DETAILS	CC	TH	172
2	08/20/10	BIKEPATH DETAILS	CC	TH	99
1	05/04/07	W2 CAP BEAM ISD RESOLUTION	JD	TH	34S1

REVISIONS

R. Valizadeh/V. Toan/Y.L./W.L./F.C.
DESIGN OVERSIGHT
SIGN OFF DATE 11/12/10

	BY	CHECKED
DESIGN	T. Ho	T. McMeans
DETAILS	R. Xu	P. Ritchie
QUANTITIES	C. Bernardo	S. Shi

PREPARED FOR THE STATE OF CALIFORNIA DEPARTMENT OF TRANSPORTATION

R. Manzanarez
PROJECT ENGINEER

ALL DIMENSIONS ARE IN MILLIMETERS UNLESS OTHERWISE SHOWN

BRIDGE NO. 34-0006L/R
KILOMETER POST 13.2/13.9

SAN FRANCISCO OAKLAND BAY BRIDGE
EAST SPAN SEISMIC SAFETY PROJECT
SELF-ANCHORED SUSPENSION BRIDGE
(SUPERSTRUCTURE & TOWER)

BIKEPATH DETAILS NO. 7

Rev. Date: 5-18-98

ORIGINAL SCALE IN MILLIMETERS FOR REDUCED PLANS 0 10 20 30 40 50 60 70 80 90 100

CU 04
EA 0120F1

DISREGARD PRINTS BEARING EARLIER REVISION DATES

REVISION DATES (PRELIMINARY STAGE ONLY): 05/31/01 04/08/02 07/01/02 12/19/02 11/13/05

SHEET 414R3 OF

FILE => I:\bb\04-012001\sas\contract plans and cco\cco\cco#172\1-original 11-12-10\dgn\agbwd07.dgn

100% PS&E

USERNAME => DWinrow DATE PLOTTED => 12 NOV 2010 TIME PLOTTED => 11:42:57

DIST.	COUNTY	ROUTE	KILOMETER POST TOTAL PROJECT	SHEET NO.	TOTAL SHEETS
04	SF	80	13.2/13.9	832R6	1204

REGISTERED ENGINEER - CIVIL

12-06-04

PLANS APPROVAL DATE

The State of California or its officers or agents shall not be responsible for the accuracy or completeness of electronic copies of this plan sheet.

REGISTERED PROFESSIONAL ENGINEER Tien Hung Ho No. C 43990 Exp. 6/30/13 CIVIL STATE OF CALIFORNIA

T.Y. LIN / MOFFATT & NICHOL
825 BATTERY STREET
SAN FRANCISCO, CA 94111

Caltrans now has a web site! To get to the web site, go to: http://www.dot.ca.gov

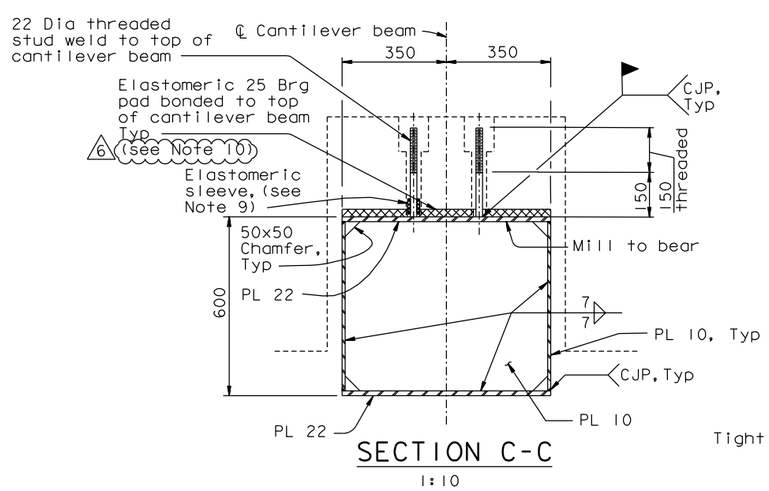

SECTION C-C
1:10

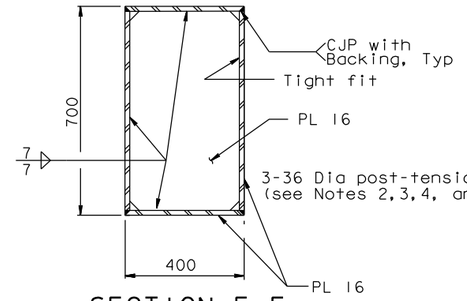

SECTION E-E
1:10

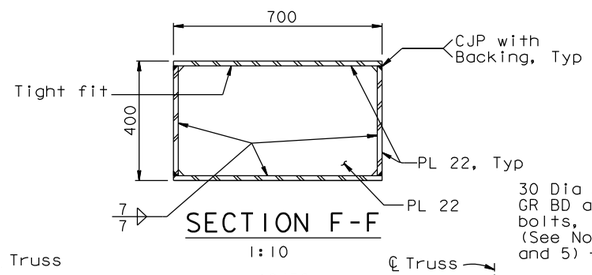

SECTION F-F
1:10

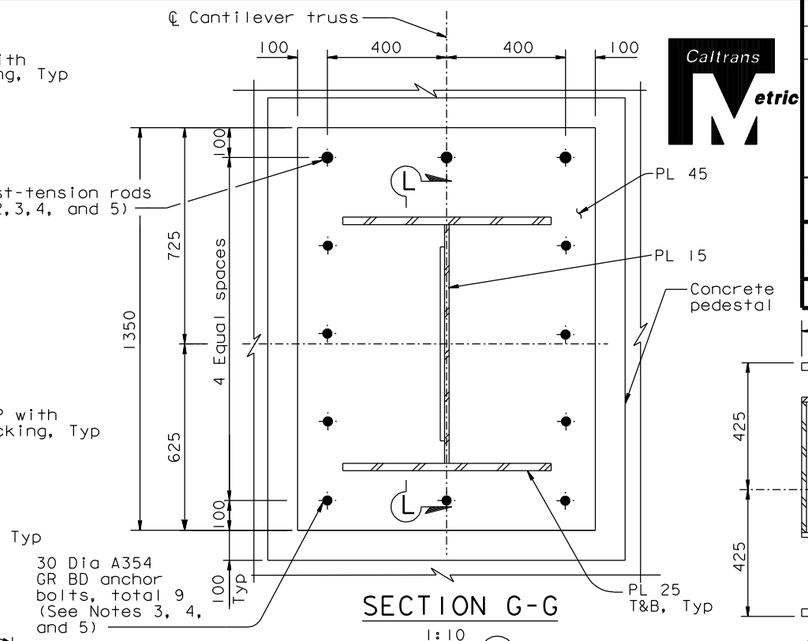

SECTION G-G
1:10

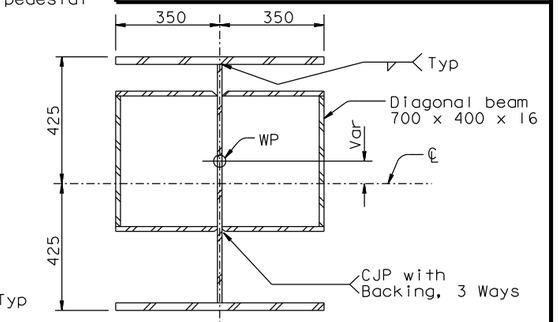

SECTION H-H
1:10

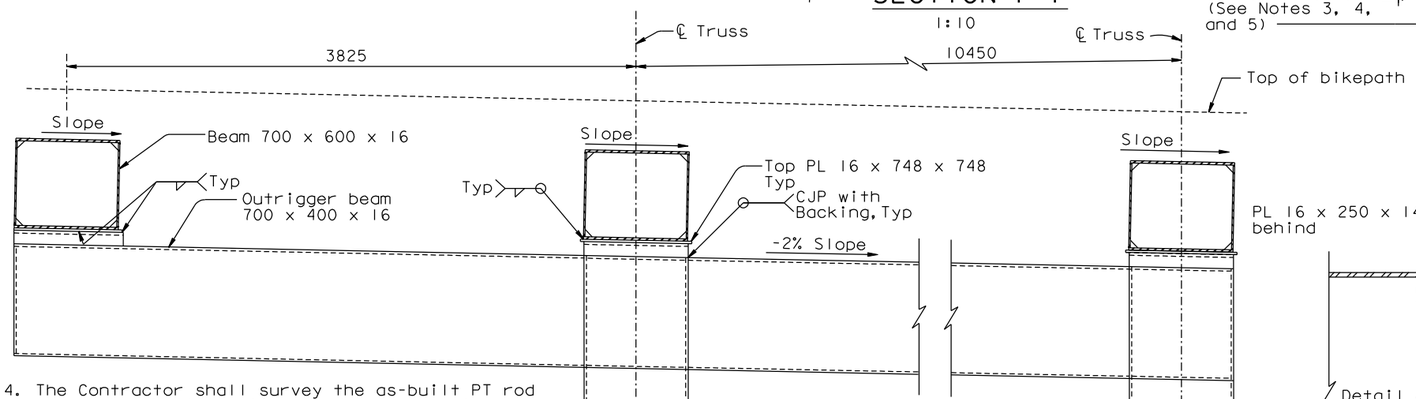

4. The Contractor shall survey the as-built PT rod and anchor bolt locations and prepare a template. This template shall be trial fit in the field prior to drilling the holes in the base plate.
5. The Contractor shall furnish all PT and anchor bolt components, and shall provide corrosion protection covering exposed ends.
6. For details not shown, see "Bikepath Details No.17, 18 & 19" sheets.
7. Note deleted.
8. Note deleted.
9. For elastomeric sleeve detail, see "Bikepath Details No.4A" sheet.
10. For leveling shim details at stud locations, see "Bikepath Details No.23" sheet.

SECTION D-D
1:20

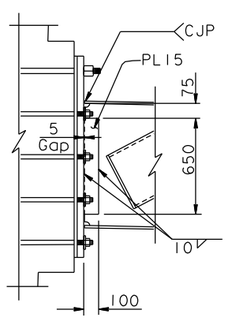

SECTION L-L
1:20

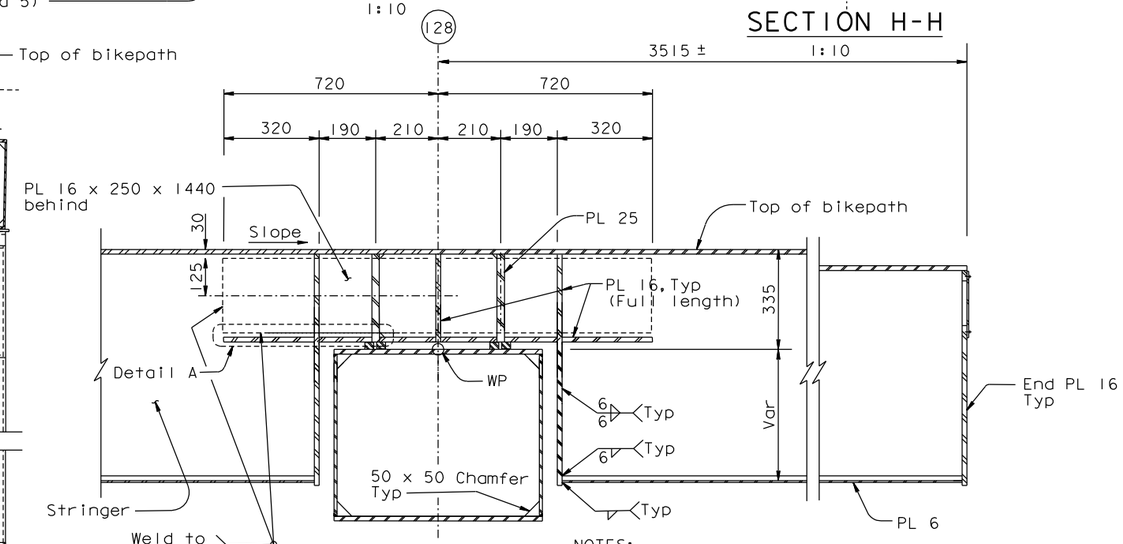

SECTION J-J
1:10
(See Note 6)

NOTES:

1. For Detail D, see "Bikepath Details No.5" sheet.
2. PT rods are ASTM A722 high strength 36 Dia rods (Fu=1030 MPa), with standard galvanized steel ducts, unless specified otherwise. The jacking force of 734 KN to be applied by Others. The Contractor may substitute the PT duct with a PT supplier recommended debonding tape, subject to review and approval of the Engineer. If the PT duct substitution is approved by the Engineer, the spherical nut inside the W2 cap beam is not required.
3. The tolerance for placement of the PT rods and anchor bolts is ±25 mm.

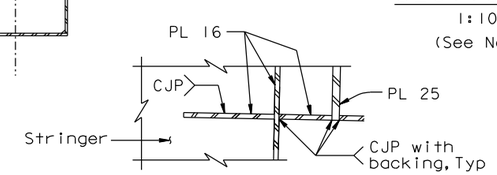

DETAIL A
1:10

ALL DIMENSIONS ARE IN MILLIMETERS UNLESS OTHERWISE SHOWN

CONTRACT CHANGE ORDER NO. ____
SHEET ___ OF ___

REQUESTS FOR INFORMATION NOT ADDRESSED IN THIS CCO REMAIN IN FORCE

MARK	DATE	DESCRIPTIONS	BY	CH'D	CCO#
6	08/17/12	BIKEPATH LEVELING	AB	TH	228SI
5	08/10/11	BIKEPATH PAD REVISIONS	GB	TH	211
4	03/04/11	BIKEPATH DETAILS	TH	CC	99
3	01/25/11	BIKEPATH STUD ISSUE	TH	CC	186
2	08/20/10	BIKEPATH DETAILS	TH	CC	99
1	05/04/07	W2 CAP BEAM ISD RESOLUTION	JD	TH	34SI

REVISIONS

R. Valizadeh/V. Toan/Y.L./W.L./F.C.
DESIGN OVERSIGHT
SIGN OFF DATE 08/17/12

Rev. Date: 5-18-98

DESIGN	BY T. Ho	CHECKED T. McMeans	
DETAILS	BY R. Xu	CHECKED P. Ritchie	
QUANTITIES	BY C. Bernardo	CHECKED S. Shi	

PREPARED FOR THE STATE OF CALIFORNIA DEPARTMENT OF TRANSPORTATION

R. Manzanarez
PROJECT ENGINEER

BRIDGE NO. 34-0006L/R
KILOMETER POST 13.2/13.9

SAN FRANCISCO OAKLAND BAY BRIDGE
EAST SPAN SEISMIC SAFETY PROJECT
SELF-ANCHORED SUSPENSION BRIDGE
(SUPERSTRUCTURE & TOWER)

BIKEPATH DETAILS NO. 8

ORIGINAL SCALE IN MILLIMETERS FOR REDUCED PLANS 0 10 20 30 40 50 60 70 80 90 100

CU 04
EA 0120F1

DISREGARD PRINTS BEARING EARLIER REVISION DATES

REVISION DATES (PRELIMINARY STAGE ONLY) 05/31/01 04/08/02 07/01/02 12/18/02 11/13/05

SHEET 415R6 OF

FILE => I:\bb\04-01200I\sas\contract plans and cco\cco\cco#228sI\I-original 08-17-12\dgn\agbwd08.dgn

100 % PS&E

USERNAME => DWinrow DATE PLOTTED => 17 AUG 2012 TIME PLOTTED => 13:41:12

REQUEST FOR INFORMATION (RFI)

RFI No.: ABF-RFI-000667R00 **Submitted By:** Smith, Kevin **Pages:** 5
Pages Attached: 4

RFI Date: 19-April-2007 **Contact Name:** Smith, Kevin **Phone No.** (412) 631-1000

Subject: Material Substitution for Bikepath Anchor Bolts at Pier W2			
References:			
Sub/Sup: ABF	**Sub RFI #:**		
Response Required by: 27-April-2007		**Response affects critical path activity?** No	

Description:

The M24 and M30 embedded anchor bolts for the Bikepath cantilever truss at Pier W2 shown on Contract Drawings 829 through 832 are specified as A325M bolts. The ASTM A325M Specification, by reference to the Specification for Structural Joints Using ASTM A325 and A490 bolts approved by the Research Council on Structural Connections, states that the ASTM A325M Specification is not applicable to anchor rods.

A325M bolts are manufactured with a specific thread length, which will not provide enough adjustment of the nut to meet the installation tolerances of an anchor bolt.

Instead of the A325M anchor bolts, ABF proposes to use 24mmØ and 30mmØ ASTM A354, Grade BC anchor rods. These anchor rods can be fabricated in the required lengths, with the necessary thread length and can be headed or supplied with an embedded nut. To accommodate the placement tolerances the thread may be located within the shear plane. The anchor rods will be hot-dipped galvanized or Dacromet 500 coated to provide the required corrosion protection. Reference the attached sketches for specific locations.

Please review and confirm this material substitution is acceptable.

Contractor Disposition:

This RFI is being submitted for Clarification of the Contract Documents

The Cost and Time Impact from this RFI is: We are unable to determine at this point whether there will be cost and/or time impacts.

Response: **Agreed Ext. Due Date:**

Pages: 1
Pages Attached: 0

Please note that RFI 327 revised the M24 shown on Section E-E of Plan Sheet 829/1204 to M30.

It is acceptable to replace the M30 ASTM A325M bolts with 30 Dia ASTM A354 rods. However, please note that the rods shall be supplied as Grade BD in lieu of the proposed Grade BC.

The A354 Grade BD anchor rods shall be galvanized per the requirements of SP 10-1.59: Steel Structures/Fabrication/Bolted Connections/. Dacromet coating is not an option for A354 in the Special Provisions.

Administrative Action:

This response resolves the RFI. No further action required.

REQUEST FOR INFORMATION (RFI)

Date: 27-April-2007	**Respondent:** He, Philip	**Phone No.:** **510-808-4620**

CERTIFIED MILL TEST REPORT

ASI ALTON STEEL INC

Alton Steel Test Lab
#5 Cut Street
Alton, IL. 62002-9011
(618) 463-4490 EXT 2486
(618) 463-4491 (Fax)

CODE LNX6

BILL TO
The Dyson Corporation
53 Freedom Road
Painesville, OH 44077

SHIP TO
The Dyson Corporation
53 Freedom Road
Painesville, OH 44077

Date	05/17/2007	Customer PO	53622-1	**Specifications**
ASI Ord No.	16173	Customer PT.		SAE 4140
ASI Ord Line Item	1			

Item Description
Steel Bar, Hot Rolled, 1.1870, 20' 0 "

Heat Number Strand Cast, RR = 44.28:1

Yield PSI	Tensile PSI	% Elongation	% ROA	Bend Test

CHEMICAL ANALYSIS TEST METHODS ASTM E-415 & E-1019

Heat Number	C	Mn	P	S	Si	Cu	Ni	Cr	Mo	Sn	Al	Nb/Cb	V	B	Ti	N	Ca
704380	0.42	0.81	0.015	0.026	0.28	0.26	0.090	0.936	0.164	0.015	0.003	0.027	0.005	0.0002	0.0024	0.0099	0.0014

JOMINY HARDENABILITY USING ASTM A-255 CALCULATED FROM CHEMICAL DI

Heat Number	GS	DI
704380	8	5.01

SPECIAL TEST RESULTS

ADDITIONAL COMMENTS

No mercury, lead, radium, of alpha containing material or equipment is used or deliberately added in the production of this steel. No weld or weld repairs were performed on this material. This Steel is 100% Electric Arc Furnace Melted and Rolled in the U.S.A.

Alteration or reproduction of this report, except in full, is not allowed without written approval by a representative of Alton Steel Incorporated.

Subscribed and sworn to before me, a Notary Public, in and for the county of Madison, State of Illinois

this _____ Day of _____

My commission expires_____

(Notary Public)

I hereby certify that the above tests are correct as contained in the records of ALTON STEEL INCORPORATED

Quality Leader: Rubert Cauley

R Cauley

Q.A. REVIEWED
DATE 6/1/07
DYSON

LNX

C RTIFIED MILL TEST REPORT

ASI
ALTON STEEL INC

Alton Steel Test Lab
#5 Cut Street
Alton, IL. 62002-9011
(618) 463-4490 EXT 2486
(618) 463-4491 (Fax)

CODE LNX7

BILL TO
The Dyson Corporation
53 Freedom Road
Painesville, OH 44077

SHIP TO
The Dyson Corporation
53 Freedom Road
Painesville, OH 44077

Date	05/17/2007	Customer PO	53622-1
ASI Ord No.	16173	Customer PT.	
ASI Ord Line Item	1		

Specifications
SAE 4140

Item Description
Steel Bar, Hot Rolled, 1.1870, 20' 0 "

Heat Number

Strand Cast, RR = 44.28:1

Heat Number	Yield PSI	Tensile PSI	% Elongation	% ROA	Bend Test

CHEMICAL ANALYSIS TEST METHODS ASTM E-415 & E-1019

Heat Number	C	Mn	P	S	Si	Cu	Ni	Cr	Mo	Sn	Al	Nb/Cb	V	B	Ti	N	Ca
704380	0.42	0.81	0.015	0.026	0.28	0.26	0.090	0.936	0.164	0.015	0.003	0.027	0.005	0.0002	0.0024	0.0099	0.0014

JOMINY HARDENABILITY USING ASTM A-255 CALCULATED FROM CHEMICAL DI

Heat Number	GS	DI
704380	8	5.01

SPECIAL TEST RESULTS

ADDITIONAL COMMENTS

No mercury, lead, radium, of alpha containing material or equipment is used or deliberately added in the production of this steel. No weld or weld repairs were performed on this material. This Steel is 100% Electric Arc Furnace Melted and Rolled in the U.S.A.

Alteration or reproduction of this report, except in full, is not allowed without written approval by a representative of Alton Steel Incorporated.

Subscribed and sworn to before me, a Notary Public, in and for the county of Madison, State of Illinois

this _____ Day of _____

My commission expires _____

(Notary Public)

I hereby certify that the above tests are correct as contained in the records of ALTON STEEL INCORPORATED

Quality Leader: Rubert Cauley

R Cauley

Q.A. REVIEWED
DATE 6/1/07
DYSON

LNX

C RTIFIED MILL TEST REPORT

ASI ALTON STEEL, INC

Alton Steel Test Lab
#5 Cut Street
Alton, IL. 62002-9011
(618) 463-4490 EXT 2486
(618) 463-4491 (Fax)

CODE LNX8

BILL TO
The Dyson Corporation
53 Freedom Road
Painesville, OH 44077

SHIP TO
The Dyson Corporation
53 Freedom Road
Painesville, OH 44077

Date	05/17/2007	Customer PO	53622-1
ASI Ord No.	16173	Customer PT.	
ASI Ord Line Item	1		

Specifications
SAE 4140

Item Description
Steel Bar, Hot Rolled, 1.1870, 20' 0 "

Heat Number

Strand Cast, RR = 44.28:1

	Yield PSI	Tensile PSI	% Elongation	% ROA	Bend Test

CHEMICAL ANALYSIS TEST METHODS ASTM E-415 & E-1019

Heat Number	C	Mn	P	S	Si	Cu	Ni	Cr	Mo	Sn	Al	Nb/Cb	V	B	Ti	N	Ca
704380	0.42	0.81	0.015	0.026	0.28	0.26	0.090	0.936	0.164	0.015	0.003	0.027	0.005	0.0002	0.0024	0.0099	0.0014

JOMINY HARDENABILITY USING ASTM A-255 CALCULATED FROM CHEMICAL DI

Heat Number	GS	DI
704380	8	5.01

SPECIAL TEST RESULTS

ADDITIONAL COMMENTS

No mercury, lead, radium, of alpha containing material or equipment is used or deliberately added in the production of this steel. No weld or weld repairs were performed on this material. This Steel is 100% Electric Arc Furnace Melted and Rolled in the U.S.A.

Alteration or reproduction of this report, except in full, is not allowed without written approval by a representative of Alton Steel Incorporated.

Subscribed and sworn to before me, a Notary Public, in and for the county of Madison, State of Illinois

this _____ Day of _____

My commission expires_____

(Notary Public)

I hereby certify that the above tests are correct as contained in the records of ALTON STEEL INCORPORATED

Quality Leader: Rubert Cauley

R Cauley

Q.A. REVIEWED
DATE 6/1/07
DYSON

LNX

C_RTIFIED MILL TEST REPORT

ASI ALTON STEEL INC

Alton Steel Test Lab
#5 Cut Street
Alton, IL. 62002-9011
(618) 463-4490 EXT 2486
(618) 463-4491 (Fax)

CODE LNX9

BILL TO

The Dyson Corporation
53 Freedom Road
Painesville, OH 44077

SHIP TO

The Dyson Corporation
53 Freedom Road
Painesville, OH 44077

Date 05/17/2007	Customer PO	53622-1	**Specifications**
ASI Ord No. 16173	Customer PT.		SAE 4140
ASI Ord Line Item 1			

Item Description
Steel Bar, Hot Rolled, 1.1870, 20' 0 "

Heat Number

Strand Cast, RR = 44.28:1

Yield PSI	Tensile PSI	% Elongation	% ROA	Bend Test

CHEMICAL ANALYSIS TEST METHODS ASTM E-415 & E-1019

Heat Number	C	Mn	P	S	Si	Cu	Ni	Cr	Mo	Sn	Al	Nb/Cb	V	B	Ti	N	Ca
704380	0.42	0.81	0.015	0.026	0.28	0.26	0.090	0.936	0.164	0.015	0.003	0.027	0.005	0.0002	0.0024	0.0099	0.0014

JOMINY HARDENABILITY USING ASTM A-255 CALCULATED FROM CHEMICAL DI

Heat Number	GS	DI
704380	8	5.01

SPECIAL TEST RESULTS

ADDITIONAL COMMENTS

No mercury, lead, radium, of alpha containing material or equipment is used or deliberately added in the production of this steel. No weld or weld repairs were performed on this material. This Steel is 100% Electric Arc Furnace Melted and Rolled in the U.S.A.

Alteration or reproduction of this report, except in full, is not allowed without written approval by a representative of Alton Steel Incorporated.

Subscribed and sworn to before me, a Notary Public, in and for the county of Madison, State of Illinois

this _____ Day of _____

My commission expires_____

(Notary Public)

I hereby certify that the above tests are correct as contained in the records of ALTON STEEL INCORPORATED

Quality Leader: Rubert Cauley

R Cauley

Q.A. REVIEWED
DATE 6/1/07
DYSON

LNX

CERTIFIED MILL TEST REPORT

ASI
ALTON STEEL, INC

Alton Steel Test Lab
#5 Cut Street
Alton, IL. 62002-9011
(618) 463-4490 EXT 2486
(618) 463-4491 (Fax)

CODE LNX 14

BILL TO
The Dyson Corporation
53 Freedom Road
Painesville, OH 44077

SHIP TO
The Dyson Corporation
53 Freedom Road
Painesville, OH 44077

Date	05/17/2007	Customer PO	53622-1	**Specifications**
ASI Ord No.	16173	Customer PT.		SAE 4140
ASI Ord Line Item	1			

Item Description
Steel Bar, Hot Rolled, 1.1870, 20' 0 "

Strand Cast, RR = 44.28:1

Heat Number **Yield PSI** **Tensile PSI** **% Elongation** **% ROA** **Bend Test**

CHEMICAL ANALYSIS TEST METHODS ASTM E-415 & E-1019

Heat Number	C	Mn	P	S	Si	Cu	Ni	Cr	Mo	Sn	Al	Nb/Cb	V	B	Ti	N	Ca
704380	0.42	0.81	0.015	0.026	0.28	0.26	0.090	0.936	0.164	0.015	0.003	0.027	0.005	0.0002	0.0024	0.0099	0.0014

JOMINY HARDENABILITY USING ASTM A-255 CALCULATED FROM CHEMICAL DI

Heat Number	GS	DI
704380	8	5.01

SPECIAL TEST RESULTS

ADDITIONAL COMMENTS

No mercury, lead, radium, of alpha containing material or equipment is used or deliberately added in the production of this steel. No weld or weld repairs were performed on this material. This Steel is 100% Electric Arc Furnace Melted and Rolled in the U.S.A.

Alteration or reproduction of this report, except in full, is not allowed without written approval by a representative of Alton Steel Incorporated.

I hereby certify that the above tests are correct as contained in the records of ALTON STEEL INCORPORATED

Subscribed and sworn to before me, a Notary Public, in and for the county of Madison, State of Illinois

this _____ Day of _____

My commission expires_____

(Notary Public)

Quality Leader: Rubert Cauley

R Cauley

Q.A. REVIEWED
DATE 6/1/07
DYSON

LNX

CERTIFIED MILL TEST REPORT

ASI ALTON STEEL INC

Alton Steel Test Lab
#5 Cut Street
Alton, IL. 62002-9011
(618) 463-4490 EXT 2486
(618) 463-4491 (Fax)

CODE LNX15

BILL TO

The Dyson Corporation
53 Freedom Road
Painesville, OH 44077

SHIP TO

The Dyson Corporation
53 Freedom Road
Painesville, OH 44077

Date	05/17/2007	Customer PO	53622-1	**Specifications**
ASI Ord No.	16173	Customer PT.		SAE 4140
ASI Ord Line Item	1			

Item Description
Steel Bar, Hot Rolled, 1.1870, 20' 0 "

Strand Cast, RR = 44.28:1

Heat Number

Yield PSI	Tensile PSI	% Elongation	% ROA	Bend Test

CHEMICAL ANALYSIS TEST METHODS ASTM E-415 & E-1019

Heat Number	C	Mn	P	S	Si	Cu	Ni	Cr	Mo	Sn	Al	Nb/Cb	V	B	Ti	N	Ca
704380	0.42	0.81	0.015	0.026	0.28	0.26	0.090	0.936	0.164	0.015	0.003	0.027	0.005	0.0002	0.0024	0.0099	0.0014

JOMINY HARDENABILITY USING ASTM A-255 CALCULATED FROM CHEMICAL DI

Heat Number	GS	DI
704380	8	5.01

SPECIAL TEST RESULTS

ADDITIONAL COMMENTS

No mercury, lead, radium, of alpha containing material or equipment is used or deliberately added in the production of this steel. No weld or weld repairs were performed on this material. This Steel is 100% Electric Arc Furnace Melted and Rolled in the U.S.A.

Alteration or reproduction of this report, except in full, is not allowed without written approval by a representative of Alton Steel Incorporated.

I hereby certify that the above tests are correct as contained in the records of ALTON STEEL INCORPORATED

Quality Leader: Rubert Cauley

R Cauley

Subscribed and sworn to before me, a Notary Public, in and for the county of Madison, State of Illinois

this _____ Day of _____

My commission expires_____

(Notary Public)

Q.A. REVIEWED
DATE 6/1/07
DYSON

LNX

STATE OF CALIFORNIA-BUSINESS, TRANSPORTATION AND HOUSING AGENCY ARNOLD SCHWARZENEGGER, Governor

DEPARTMENT OF TRANSPORTATION - District 4 Toll Bridge Program
333 Burma Rd.
Oakland, CA 94607
(510) 622-5660, (510) 286-0550 fax

Flex your power
Be energy efficient!

June 06, 2007

Contract No. 04-0120F4
04-SF-80-13.2 / 13.9
Self-Anchored Suspension Bridge
Letter No. 05.03.01-000296

Michael Flowers
Project Executive
American Bridge/Fluor Enterprises, a JV
375 Burma Road
Oakland, CA 94607

Dear Michael Flowers,

Submittal 136 - MFSQA for Tensile Testing Metallurgical Laboratory

The Department has reviewed submittal ABF-SUB-00136, "MFSQA for Tensile Testing Metallurgical Laboratory," dated May 23, 2007. This submittal is Approved and upon receipt and approval of the MFSQA documents for the remaining Dyson subcontractors, the Contractor may schedule a Department audit as required by Special Provisions, Section 8-4, "Audits."

If you have any further questions please contact Dr. Mazen Wahbeh at (818) 292-0659.

Sincerely,

Gary Pursell

GARY PURSELL
Resident Engineer

cc: Rick Morrow
file: 05.03.0, 55.0136

STATE OF CALIFORNIA-BUSINESS, TRANSPORTATION AND HOUSING AGENCY ARNOLD SCHWARZENEGGER, Governor

DEPARTMENT OF TRANSPORTATION - District 4 Toll Bridge Program
333 Burma Rd.
Oakland, CA 94607
(510) 622-5660, (510) 286-0550 fax

Flex your power
Be energy efficient!

August 24, 2007

Contract No. 04-0120F4
04-SF-80-13.2 / 13.9
Self-Anchored Suspension Bridge
Letter No. 05.03.01-000487

Michael Flowers
Project Executive
American Bridge/Fluor Enterprises, a JV
375 Burma Road
Oakland, CA 94607

Dear Michael Flowers,

Department Audit of Dyson Corporation

The Department has reviewed ABF letter 257, dated August 14, 2007, and the "Corrective Action Request" from the Dyson Corporation, dated August 09, 2007. Based upon the information provided and in accordance with Special Provisions section 8-4, "Audits," the Dyson Corporation receives a "Pass" for the Department audit. This "Pass" applies only to the Dyson Corporation. Suppliers and subcontractors to the Dyson Corporation are subject to separate MFSQA reviews and audits. The following table summarizes the current status of associated audits:

Company	Letter No.	Date of Notice	MFSQA	AUDIT
AAA Galvanizing	321	06-18-2007	Approved	
Art Galvanizing	336	06-22-2007	Approved	
	403	07-25-2007		Contingent Pass
Central Testing Lab	320	06-18-2007	Approved	
	413	07-26-2007		Fail
Custom Industrial Processing	325	06-18-2007	Not Approved	
Industrial Coatings Inc	444	08-06-2007	Approved	
Mechanical Galv-Plating Corp	361	07-05-2007	Approved	
	432	08-02-2007		Pass
North American Galvanizing	337	06-22-2007	Approved	
	421	07-31-2007		Fail
Stork Herron Testing Lab	297	06-06-2007	Approved	
	417	07-30-2007		Contingent Pass
TC Industries	367	07-09-2007	Approved	
Tensile Testing Metallurgical Lab	296	06-06-2007	Approved	
	409	07-26-2007		Pass
Universal Galvanizing	338	06-25-2007	Approved	

The Contractor is reminded that work may not proceed at the facilities receiving a "Contingent Pass," until the outstanding issues detailed in the Department's letters have been addressed.

If you have any further questions, please contact Gary Lai at the Working Drawing Campus.

Sincerely,

GARY PURSELL
Resident Engineer

cc: Rick Morrow
Mazen Wahbeh

file: 05.03.01, 55.0097

STATE OF CALIFORNIA-BUSINESS, TRANSPORTATION AND HOUSING AGENCY ARNOLD SCHWARZENEGGER, Governor

DEPARTMENT OF TRANSPORTATION - District 4 Toll Bridge Program
333 Burma Rd.
Oakland, CA 94607
(510) 622-5660, (510) 286-0550 fax

Flex your power
Be energy efficient!

October 18, 2007

Contract No. 04-0120F4
04-SF-80-13.2 / 13.9
Self-Anchored Suspension Bridge
Letter No. 05.03.01-000706

Michael Flowers
Project Executive
American Bridge/Fluor Enterprises, a JV
375 Burma Road
Oakland, CA 94607

Dear Michael Flowers,

Department Audit - Art Galvanizing Works

The Department is in receipt of ABF-CAL-LTR-000271, dated August 29, 2007, responding to the Department's review of Submittal ABF-SUB-000160R00, MFSQA for Art Galvanizing Works. Based upon the information provided, Art Galvanizing Works is receiving a Pass. The following issues must be satisfactorily addressed in writing prior to the start of fabrication:

1. The previous response to MFSQA response R6 indicated positively that there is a separation between Quality Control and Production. Currently, the same individual is managing both Production and Quality Control. Please confirm whether or not a third party will be used for Quality Control.

2. Regarding the Observations:
   a. **Observation 1:** This matter is closed as it does not relate directly to production.

   b. **Observation 2:** This matter is closed. The Department notes and accepts the Contractor's explanation.

   c. **Observation 3:** This item was meant to convey that Art Galvanizing Works did not have facilities to handle blasting independently. Maximum capacity is 3 feet in length, while rods for this Contract are up to 15 feet long. The Department notes and accepts the Contractor's explanation. This matter will be closed pending submission of procedures detailing the blasting and inspection of the material.

   d. **Observation 4-8:** These issues can be resolved by addressing the previous comment regarding the separation between Quality Control and Production.

The Department requests that notification be provided prior to the start of any work at this facility for this Contract.

If you have further questions, please contact Dr. Venkatesh Iyer at 858.967.6363.

Sincerely,

GARY PURSELL
Resident Engineer

cc: Rick Morrow, Brian Boal, Mazen Wahbeh, Vankatesh Iyer
file: 05.03.01, 55.0160

STATE OF CALIFORNIA • DEPARTMENT OF TRANSPORTATION

NOTICE OF MATERIALS TO BE USED

CEM-3101 (REV 05/2006) CT# 7541-3511-1

ADA Notice

For individuals with sensory disabilities, this document is available in alternate formats. For information call (916) 654-6410 or TDD (916) 654-3880 or write Records and Forms Management, 1120 N Street, MS-89, Sacramento, CA 95814.

To (Resident Engineer): MR. GARY PURSELL

Date: 7-22-07

You are hereby notified that materials required for use under Contract Number (1) 04-0120F4

Dist. 04 Co. S.F. Rte. 80 P.M. 13.2 | 13.9

will be obtained from the following sources:

Contract Bid Item Number (2)	Item Code (3)	Contract Item Description (4)	Item Component (5)	Item Sub-Component (5)	Manufacturer/Provider Name(s) and Address(es) (6)
57	049319	FURNISH S. STL. (BRIDGE) (BIKEPATH)	ANCHOR BOLT ASSEMBLIES AT W2 PRCAPL BIKEPATH BRKTS	CONCRETE ANCHOR BOLT ASSEMBLIES	THE DYSON CORPORATION 53 FREEDOM ROAD PAINESVILLE, OH 44077 440-946-3500
					MR. STEVE MARSH MANUFACTURE ALL BOLT ASSEMBLIES ROD
59	049321	FURNISH STRUCT. STEEL (BRIDGE) (SADDLES)	ANCHOR ROD ASSEMBLIES AT W2 CAP CABLE DEVIATION SADDLES.	CONCRETE ANCHOR ROD ASSEMBLIES	TENSILE TESTING (TTML) 4520 WILLOW PARKWAY CLEVELAND, OH 44125 216-641-3290
					MR. JEFFRY J. SMITH
50	550203	FURNISH STRUCT. STEEL (BRIDGE)	ANCHOR ROD ASSEMBLIES AT W2 CAP W2 JACKING FRAME	CONCRETE ANCHOR ROD ASSEMBLIES	STORK HERRON TESTING 5405 E. Schaaf ROAD CLEVELAND, OH 44131 216-524-1450 (EXT 277)
					MR. GREGORY T. CZWADEL
82	750501	MISCELLANEOUS METAL (BRIDGE)	ANCHOR BOLT ASSEMBLIES ATTACH DEHUM. STL. BRKTS	CONCRETE ANCHOR BOLT ASSEMBLIES	ART GALVANIZING 3935 Valley ROAD CLEVELAND, OH 44109 216-749-0020 ADRIENE KLEIN

It is requested that you arrange for sampling, testing and inspection of materials prior to delivery in accordance with Section 6 of the *Standard Specifications*. It is understood that source inspection does not relieve the prime contractor of the full responsibility for incorporating into the work, materials that comply in all respects with the contract plans and specifications. Nor does it preclude the subsequent rejection of materials found to be unsuitable.

(7) c: Materials Administrator, Mail Station #5
Materials Engineering & Testing Services
5900 Folsom Blvd, Sacramento, CA 95819
Fax: (916) 227-7084
Construction Senior Engineer
Contractor File
District Construction Office

Yours Truly,

Contractor: AMERICAN BRIDGE / FLUOR - A JOINT VENTURE

Address: 375 BURMA ROAD, OAKLAND, CA, 94607

Business Phone	Business Fax	E-Mail Address
510-808-4600	510-808-4601	

STATE OF CALIFORNIA--BUSINESS,TRANSPORTACTION AND HOUSING AGENCY

Arnold Schwarzenegger, Governor

DEPARTMENT OF TRANSPORTATION
DIVISION OF ENGINEERING SERVICES
Office of Structural Materials
Quality Assurance and Source Inspection

Bay Area Branch
690 Walnut Ave.St. 150
Vallejo, CA 94592-1133
(707) 649-5453
(707) 649-5493

Contract #: 04-0120F4
Cty: SF/ALA Rte: 80 PM: 13.2/13.9
File #: 1.7

NOTICE OF MATERIALS TO BE FURNISHED

To: The Dyson Corporation
53 Freedom Road
Painesville, OH44077

Contractor: American Bridge/Fluor Enterprises, a JV
375 Burma Road
Oakland, CA 94607

Report No: NMF-plowry-000003
Date: 12-Feb-2008

Resident Engineer: Pursell, Gary
Address: 333 Burma Road
City: Oakland, CA 94607

The above contractor has notified this department that your firm is to furnish the following materials:

Bid Item #	Material Description
57	FURNISH STRUCTURAL STEEL (BRIDGE) (BIKEPATH) ANCHOR BOLT ASSEMBLIES

In accordance with Section 6-1.01 of the California Department of Transportation Standard Specifications, this material is subject to our inspection and release before shipment is made. Please notify this office as soon as manufacture or fabrication is proposed or as soon as sampling is required, Sampling, tests, and inspection will be made in accordance with Section 6 of the Standard Specifications.

Source inspection is random and does not relieve the contractor of the full responsibility of incorporating materials in the work that comply in all respects with the contract plans and specifications, nor does it preclude the subsequent rejection of materials found to be unsuitable.

Material shipped without proper release shall constitute sufficient reason for rejection.

Please fax the attached Inspection Request Form back to the designated Quality Assurance and Source Inspection Branch. This office must receive the request with sufficient time to complete testing or sampling prior to shipment. Your cooperation in this matter is greatly appreciated.

Sincerely,

Pursell, Gary, SMR for

Lowry, Patrick
Structural Materials Representative

DEPARTMENT OF TRANSPORTATION
DIVISION OF ENGINEERING SERVICES
Office of Structural Materials
Quality Assurance and Source Inspection

Bay Area Branch
690 Walnut Ave.St. 150
Vallejo, CA 94592-1133
(707) 649-5453
(707) 649-5493

Contract #: 04-0120F4
Cty: SF/ALA Rte: 80 PM: 13.2/13.9
File #: 76.25B

QUALITY ASSURANCE -- NON-CONFORMANCE REPORT

Location: Dyson Corporation, Painesville, OH **Report No:** NCR-000161
Prime Contractor: American Bridge/Fluor Enterprises, a JV **Date:** 11-Jul-2008
Submitting Contractor: Dyson Corp. & Subs **NCR #:** DYSN-0002

Type of problem:

Welding	☐	**Concrete**	☐	**Other**	☑	
Welding	☐	**Curing**	☐	**Procedural**	☐	**Bridge No:** 34-0006
Joint fit-up	☐	**Coating**	☐	**Other**	☐	**Component:**
Procedural	☐	**Procedural**	☐	**Description:**	COC for nonexistent standard	

Reference Description: A 354 Grade BD material fabricated to nonexistent Metric standard

Description of Non-Conformance:

The Dyson Corporation Quality Control Manager (QCM) allowed submission of a Certificate of Compliance (COC) denoting conformance with a nonexistent specification: ASTM A 354 Grade BD, M30 (30 mm diameter); however, no Metric specifications exist for A 354.

The bolts were fabricated to A 354BD material standards, for which they passed Quality Control (QC) testing; threading and dimensions are apparently to A 325M.

Contract Plans (CP) Sheet 830 calls for a 30 mm diameter A 354BD bolt. Since A 354 does not have a Metric version, per CP notes sheet 423, the Contractor should have provided A 354BD bolts, inch diameter verified with Design.

Applicable reference:

Contract Plans:
Sheet 423, "General Notes No. 1," "Substitution of Non-Metric HS Fasteners": "Bolts and rods designated as xx Dia...standard specifications."
Sheet 830R01, "Bikepath Details No. 6"

Who discovered the problem: ASMR, Markian Petrina
Name of individual from Contractor notified: Charles Kanapicki, PE, QCM
Time and method of notification: Telephone message, 11:15 AM, 7/18/08
Name of Caltrans Engineer notified: Ron Matin
Time and method of notification: Telephone conversation, 9 AM, 7/18/08
QC Inspector's Name: Unknown
Was QC Inspector aware of the problem:

QUALITY ASSURANCE -- NON-CONFORMANCE REPORT

(Continued Page 2 of 2)

☐ **Yes** ☑ **No**

Contractor's proposal to correct the problem:

Accept the bolts as "fit for purpose," as they pass mechanical testing and A 563M nuts can be threaded onto the bolts without excessive force.

Comments:

This report is for the purpose of determining conformance with the contract documents and is not for the purpose of making repair or fit for purpose recommendations. Should you require recommendations concerning repairs or remedial efforts please contact Venkatesh Iyer,(858) 967-6363, who represents the Office of Structural Materials for your project.

Inspected By:	Petrina,Markian	SMR
Reviewed By:	Iyer,Venkatesh	SMR

DEPARTMENT OF TRANSPORTATION
DIVISION OF ENGINEERING SERVICES
Office of Structural Materials
Quality Assurance and Source Inspection

Bay Area Branch
690 Walnut Ave.St. 150
Vallejo, CA 94592-1133
(707) 649-5453
(707) 649-5493

Contract #: 04-0120F4
Cty: SF/ALA Rte: 80 PM: 13.2/13.9
File #: 76.25B

QUALITY ASSURANCE -- NON-CONFORMANCE REPORT

Location: Dyson Corporation, Painesville, OH **Report No:** NCR-000162
Prime Contractor: American Bridge/Fluor Enterprises, a JV **Date:** 11-Jul-2008
Submitting Contractor: Dyson Corp. & Subs **NCR #:** DYSN-0003

Type of problem:

Welding	☐	**Concrete**	☐	**Other**	☑	
Welding	☐	**Curing**	☐	**Procedural**	☐	**Bridge No:** 34-0006
Joint fit-up	☐	**Coating**	☐	**Other**	☐	**Component:** A 563M nut
Procedural	☐	**Procedural**	☐	**Descripton:**	Nonconforming Fasteners	

Reference Description: Nonconforming A 563M nuts submitted by Dyson QC

Description of Non-Conformance:
The nut threads are excessively thick and do not pass the "Go" gauge.

Applicable reference:
ASTM A 563M

Who discovered the problem: Trans Lab Materials Testing Laboratory
Name of individual from Contractor notified: Charles Kanapicki, PE, QCM
Time and method of notification: Telephone Message, 7/18/08
Name of Caltrans Engineer notified: Ron Matin
Time and method of notification: Email, 7/17/08
QC Inspector's Name: Unknown
Was QC Inspector aware of the problem: ☐ **Yes** ☑ **No**

Contractor's proposal to correct the problem:
ABF-RFI-001443R00 requests acceptance of the nuts as "fit for purpose" since the nuts thread onto accompanying bolts without excessive force.

Comments:
This report is for the purpose of determining conformance with the contract documents and is not for the purpose of making repair or fit for purpose recommendations. Should you require recommendations concerning repairs or remedial efforts please contact Venkatesh Iyer, (858) 967-6363, who represents the Office of Structural Materials for your project.

Inspected By:	Petrina,Markian	SMR
Reviewed By:	Iyer,Venkatesh	SMR

DEPARTMENT OF TRANSPORTATION
DIVISION OF ENGINEERING SERVICES
Office of Structural Materials
Quality Assurance and Source Inspection

Bay Area Branch
690 Walnut Ave.St. 150
Vallejo, CA 94592-1133
(707) 649-5453
(707) 649-5493

Contract #: 04-0120F4
Cty: SF/ALA Rte: 80 PM: 13.2/13.9
File #: xx.25A

QUALITY ASSURANCE -- NON-CONFORMANCE RESOLUTION

Location: Dyson Corporation, Painesville, OH
Report No: NCS-000060
Prime Contractor: American Bridge/Fluor Enterprises, a JV
Date:
Submitting Contractor: Dyson Corp. & Subs
NCR #: DYSN-0003

Type of problem:

Welding	☐	**Concrete**	☐	**Other**	☑	
Welding	☐	**Curing**	☐	**Procedural**	☐	**Bridge No:** 34-0006
Joint fit-up	☐	**Coating**	☐	**Other**	☐	**Component:**
Procedural	☐	**Procedural**	☐	**Descripton:**		

Date the Non-Conformance Report was written: 11-Jul-2008

Description of Non-Conformance:
The nut threads are excessively thick and do not pass the "Go" gauge.

Contractor's proposal to correct the problem:
ABF-RFI-001443R00 requests acceptance of the nuts as "fit for purpose" since the nuts thread onto accompanying bolts without excessive force.

Corrective action taken:
Based on ABF-RFI-001443R00, the Engineer accepted the nuts as non-compliant but "fit for purpose." The Contractor should be reminded that this is a special instance and should not be expected as a standard practice.

Did corrective action require Engineer's approval? ☑ **Yes** ☐ **No**

If so, name of Engineer providing approval: Ron Matin **Date:** 21-Jul-2008

Is Engineer's approval attached? ☐ **Yes** ☑ **No** See response to ABF-RFI-001443R00.

Comments:
This report is for the purpose of determining conformance with the contract documents and is not for the purpose of making repair or fit for purpose recommendations. Should you require recommendations concerning repairs or remedial efforts please contact Venktaesh Iyer, (858) 967-6363, who represents the Office of Structural Materials for your project.

Inspected By:	Petrina,Markian	Quality Assurance Inspector
Reviewed By:	Iyer,Venkatesh	QA Reviewer

State of California
Department of Transportation

Structural Materials Testing Laboratory
5900 Folsom Boulevard, Sacramento, CA 95819

TEST REPORT

ACCREDITED
CERTIFICATE NO. 2364.01

Remarks ref: ASTM A354m, A563m, A153, TM 03; Bolt Lot # LNX8, LNX6, LNX7, Nut Lot # DCEK, Washer Lot # L91387. Nut Lot # DCEK, FAIL, Nut will not accept GO GAUGE. All Other Samples Are Satisfactory for Use.

Sample No: SM-08-0866
Date Sampled: 07/09/08 **Date Rec'd:** 07/09/08 **Date Reported:** 07/14/08
Lot No: B9901908 **TL-101 / SIC No:** C715330
Contract No: 04-0120F4
Material: A354 m30 Bolt Assemblies
Manufacturer: Dyson
Sampler: Danny Smith

7-14-08

Results: **Nut Lot # DCEK, SAMPLES SUBMITTED DO NOT COMPLY WITH SPECIFICATIONS, All Other Samples Are Satisfactory for Use**

SOURCE	CHARGE	E.A.	SUB JOB	SPECIAL DESIGNATION	OBJECT
59318	04	0120F3			0270

STATE OF CALIFORNIA • DEPARTMENT OF TRANSPORTATION
SAMPLE IDENTIFICATION CARD
TL-0101 (REV. 10/97) 08-0866 CARD NUMBER C 715330

☐ PRELIMINARY TESTS
☐ PROCESS TESTS
☒ ACCEPTANCE TESTS
INDEPENDENT ASSURANCE TESTS
☐ DIST. LAB
☐ TRANS. LAB
☒ SPECIAL TESTS

SAMPLE SENT TO:
☒ HDQTRS. LAB
☐ BRANCH LAB
☐ DIST. LAB

FIELD NO.
DIST. LAB NO.
LOT NO. B9901908
P.O. OR REQ. NO.
SHIPMENT NO.
AUTHORIZATION NO.

SAMPLE OF HSB
FOR USE IN 3 HSB
SAMPLE FROM 430 - 191397
435 - 191385
460 - 191396
DEPTH
LOCATION OF SOURCE TOBS, TRE
THIS SAMPLE IS SHIPPED IN (NO. CONTAINERS) 1 AND IS ON E OF A GROUP OF 3 LOTS SAMPLES REPRESENTING (TONS, GAL., BELS, STA, ETC.)
OWNER OR MANUFACTURER
TOTAL QUANTITY AVAILABLE
TEST RESULTS DESIRED ☐ NORMAL ☐ PRIORITY
DATE NEEDED
REMARKS All items not used to be returned to contractor

COVER ADDITIONAL INFORMATION WITH LETTER
DATE SAMPLEED 7/9/08
BY Danny Smith TITLE QA Inspector
DIST., CO, RTE, PM
LIMITS
CONT. NO. 04-0120F4
FED. NO.
RES. ENGR. OR SUPT. Gary Purcell
ADDRESS
CONTRACTOR ABC

MAIL TO SAME DESTINATION AS SAMPLE

Lab Manager Quality Manager

Print

ASTM A354 BD Threaded Bolts and Nuts

Department of Transportation
Structural Materials Laboratory

SM Number = 08-0866
Contract No_ = 04-0120f4

Sample	Mfg_ Lot	Size	Pitch Diameter	Peak Load	Peak Stress	Comments
	FC			(kN)	(kN)	
1A	~~MD972Z~~DCEK	30mm Hex		607.2		Nut Proof Load
2A	DCEK	30mm Hex		608		Nut Proof Load
2B	DCEK	30mm Hex		608.5		Nut Proof Load
3A	DCEK	30mm Hex		610.2		Nut Proof Load
3B	DCEK	30mm Hex		611.6		Nut Proof Load
1A	LNX8	30MM		613.6		A354 BD
2A	LNX6	30MM		639.7		A354 BD
3A	LNX7	30MM		617.7		A354 BD
3B	LNX7	30MM		612.6		A354 BD

OK

STRUCTURAL MATERIALS TESTING LABORATORY FASTENER ASSEMBLY WORKSHEET
FORM TI REV. 2/05)

APPROVED FOR E BY SMTL QUALITY MANAGER:

SM Number 08-0866 Lot Number B99 01908 Page 1 of 2

Contract 04-0120 K4 TL-0101 Number C715330 Date Rec'd. 7/9/08 Date Tested: 7/10/08

Bolts: A 354 M HDG Lab Technician: BRUCE

Sample No.	1A	1B	1C		2A	2B	2C	2D		
Mfg. Lot No.	LNX8				LNX6					
Product Markings	ES BD LNX8				ES BD LNX6					
Size	30 M				30M					
Pitch Diameter										
Bolt Length	420 MM				435MM					
Ring Gages/Go Nogo	GO/OK				GO/OK					
Zinc Coating Thick.	3.84	4.34	4.98		5.70	5.80	5.28	6.89		
Hardness Rc / Rb	35.0				35.37	35.90				
Wedge Tensile										

Nuts: A 563 M # CLASS 10

Sample No.	1A	1B	1C		2A	2B	2C	2D		
Mfg. Lot No.	OCEK				OCEK					
Product Markings	D/N 10				D/N 10					
Size	30 M				30 M					
Go / No-Go	GO/NO	WILL NOT ACCEPT GO GAUGE								
Zinc Coating	3.69	2.93	3.25		2.62	2.50	3.29	2.38		
Hardness Rc / Rb	25.65				26.25	26.82				
Nut Proof Load										

Washer: DIN 6916 ~~CA. 10~~ 33

Sample No.	1A	1B	1C		2A	2B	2C	2D		
Mfg. Lot No.	L91387				L91387					
Product Markings	HV XY				HV XY					
Zinc Coating	3.17	2.36	3.22		2.96	2.81	3.27	2.62		
Hardness Rc / Rb	42.80				40.70	40.85				

STRUCTURAL MATERIALS TESTING LABORATORY
FORM TM (REV. 2/05)

FASTENER ASSEMBLY WORKSHEET

APPROVED FOR USE BY SMTL QUALITY MANAGER:

SM Number 08-0866 Lot Number B9901908 Page 2 of 2

Contract 04-0120 K4 B3 TL-0101 Number C715 330 Date Rec'd. 7/9/08 Date Tested: 7/10/08

Bolts: A354 M HDG Lab Technician: BRUCE

Sample No.	3A	3B	3C	3D						
Mfg. Lot No.	LNX7	—	—	—						
Product Markings	CE LNX7 BK	—	—	—						
Size	30M	—	—	—						
Pitch Diameter										
Bolt Length	460mm	—	—	—						
Ring Gages/Go Nogo	GO/OK	—	—	—						
Zinc Coating Thick.	5.43	5.27	4.16	5.33						
Hardness (Rc / Rb)	35.02	35.45	—	—						
Wedge Tensile			—	—						

Nuts: A563M CLASS 10

Sample No.	3A	3B	3C	3D						
Mfg. Lot No.	DCEK	—	—	—						
Product Markings	D/N 10	—	—	—						
Size	30M	—	—	—						
Go / No-Go	WILL NOT ACCEPT GO GAUGE									
Zinc Coating	3.85	3.55	2.43	3.50						
Hardness (Rc / Rb)	25.80	28.47	—	—						
Nut Proof Load			—	—						

Washer: DIN 6916

Sample No.	3A	3B	3C	3D						
Mfg. Lot No.	L91387	—	—	—						
Product Markings	HV xy	—	—	—						
Zinc Coating	2.66	2.69	3.06	2.40						
Hardness (Rc / Rb)	41.40	40.45	—	—						

7/9

08-0866

TL-102 Field Inspectors Fastener Assembly Sampling Sheet

Caltrans Test Number:	0								
Date Sampled:	7/9/2008	Contractor:	Dyson Corp.		Bid Item No.:	58,60	Bridge No.:	Unknown	
Contract:	04-0120F4	Location Sampled:	Job-site		Contact:	Chuck Kanapicki			
CT Lot No.	B99-019-08	Sampled By:	Danny Smith		Title:	QA Inspector			
	Inspectors Office:	Bay Area Branch	Phone #:	707-5525270		Fax #:	916-227-7117		
R. E.'s Name:	Gary Pursell		Co.:	SF	Rt.:	80	PM.:	8.2/8.7	
R. E.'s Address:	333 Burma Road		Date Released:			Ship To:	Jobsite		
City St. Zip:	Oakland, CA 94607		Identification:			File Loc.:	1	.09	
SMR:	Venkatesh Iyer (858) 967-	Type In SMR:	Reviewer:	Markian Petrina		Title:	QA Reviewer		

Sample No.	1	2	3	4	5	6	7	8	9	10
Assembly or Rocap No.	N/A	N/A	N/A							
Quantity Available	5	24	20							
Number of Samples	3	~~4~~	~~4~~							
Bolt Manufacture	Dyson	Dyson	Dyson							
Heat Number	704380	704380	704380							
Mfg. Lot Number	L91397	L91385	L91396							
Grade & Description	A354 BD	A354 BD	A354 BD							
Size	M30 x 3.5-6g x 420	M30 x 3.5-6g x 435	M30 x 3.5-6g x 460							
Finish	HD galv	HD galv	HD galv							
Verify Test Reports	yes	yes	yes							
Pass/Fail										
				~~Sp~~						
Nut Manufacture	Dyson	Dyson	Dyson							
Heat Number	501929	501929	501929							
Mfg. Lot Number	L91386	L91386	L91386							
Grade	A563M Cl.10	A563M Cl.10	A563M Cl.10							
Finish	HD galv	HD galv	HD galv							
Verify Test Reports	yes	yes	yes							
Pass/Fail										
			5 / 49 TOTAL ALL							
Washer Manufacture	Unknown	Unknown	Unknown							
Heat Number	4307020484	4307020484	4307020484							
Mfg. Lot Number	L91387	L91387	L91387							
Grade	DIN 6916	DIN 6916	DIN 6916							
Finish	HD galv	HD galv	HD galv							
Verify Test Reports	yes	yes	yes							
Pass/Fail										

Summary of Items Observed and Conversations: (Appears on TL-29)	5/TOTAL 49 TOTAL ALL

TL-102 Field Inspectors Fastener Assembly Sampling Sheet

Caltrans Test Number:	0								
Date Sampled:	7/9/2008	Contractor:	Dyson Corp.		Bid Item No.:	58,60	Bridge No.:	Unknown	
Contract:	04-0120F4	Location Sampled:	Job-site		Contact:	Chuck Kanapicki			
CT Lot No.	B99-019-08	Sampled By:	Danny Smith		Title:	QA Inspector			
	Inspectors Office:	Bay Area Branch	Phone #:	707-5525270		Fax #:	916-227-7117		
R. E.'s Name:	Gary Pursell		Co.:	SF	Rt.:	80	PM.:	8/2/8.7	
R. E.'s Address:	883 Burma Road		Date Released:			Ship To:	Jobsite		
City St. Zip:	Oakland, CA 94607		Identification:			File Loc.:	1.09		
SMR:	Venkatesh Iyer (858) 967	Type In SMR:	Reviewer:	Markian Petrina		Title:	QA Reviewer		

Sample No.	1	2	3	4	5	6	7	8	9	10
Assembly or Rocap No.	N/A	N/A	N/A							
Quantity Available	5	24	20							
Number of Samples	3	1	1							
Bolt Manufacture	Dyson	Dyson	Dyson							
Heat Number	704380	704380	704380							
Mfg. Lot Number	L91397	L91385	L91396							
Grade & Description	A354 BD	A354 BD	A354 BD							
Size	M30 x 3.5-6g x 420	M30 x 3.5-6g x 435	M30 x 3.5-6g x 460							
Finish	HD galv	HD galv	HD galv							
Verify Test Reports	yes	yes	yes							
Pass/Fail										
Nut Manufacture	Dyson	Dyson	Dyson							
Heat Number	501929	501929	501929							
Mfg. Lot Number	L91386	L91386	L91386							
Grade	A563M Cl.10	A563M Cl.10	A563M Cl.10							
Finish	HD galv	HD galv	HD galv							
Verify Test Reports	yes	yes	yes							
Pass/Fail										
Washer Manufacture	Unknown	Unknown	Unknown							
Heat Number	4307020484	4307020484	4307020484							
Mfg. Lot Number	L91387	L91387	L91387							
Grade	DIN 6916	DIN 6916	DIN 6916							
Finish	HD galv	HD galv	HD galv							
Verify Test Reports	yes	yes	yes							
Pass/Fail										

Summary of Items Observed and Conversations: (Appears on TL-29)

Page 2 Contract: 04-0120F4 CT Lot No. Caltrans Test Number: 0

Sample No.	11	12	13	14	15	16	17	18	19	20
Assembly or Rocap No.										
Quantity Available										
Number of Samples										
Bolt Manufacture										
Heat Number										
Mfg. Lot Number										
Grade & Description										
Size										
Finish										
Verify Test Reports										
Pass/Fail										
Nut Manufacture										
Heat Number										
Mfg. Lot Number										
Grade										
Finish										
Verify Test Reports										
Pass/Fail										
Washer Manufacture										
Heat Number										
Mfg. Lot Number										
Grade										
Finish										
Verify Test Reports										
Pass/Fail										

Other Notes:
Does not appear on TL-29

DEPARTMENT OF TRANSPORTATION
DIVISION OF ENGINEERING SERVICES
Office of Structural Materials
Quality Assurance and Source Inspection

Bay Area Branch
690 Walnut Ave.St. 150
Vallejo, CA 94592-1133
(707) 649-5453
(707) 649-5493

Contract #: 04-0120F4
Cty: SF/ALA Rte: 80 PM: 13.2/13.9
File #: xx.25A

QUALITY ASSURANCE -- NON-CONFORMANCE RESOLUTION

Location: Dyson Corporation, Painesville, OH
Prime Contractor: American Bridge/Fluor Enterprises, a JV
Submitting Contractor: Dyson Corp. & Subs

Report No: NCS-000060
Date:
NCR #: DYSN-0003

Type of problem:

Welding	☐	**Concrete**	☐	**Other**	☑	
Welding	☐	**Curing**	☐	**Procedural**	☐	**Bridge No:** 34-0006
Joint fit-up	☐	**Coating**	☐	**Other**	☐	**Component:**
Procedural	☐	**Procedural**	☐	**Descripton:**		

Date the Non-Conformance Report was written: 11-Jul-2008

Description of Non-Conformance:
The nut threads are excessively thick and do not pass the "Go" gauge.

Contractor's proposal to correct the problem:
ABF-RFI-001443R00 requests acceptance of the nuts as "fit for purpose" since the nuts thread onto accompanying bolts without excessive force.

Corrective action taken:
Based on ABF-RFI-001443R00, the Engineer accepted the nuts as non-compliant but "fit for purpose." The Contractor should be reminded that this is a special instance and should not be expected as a standard practice.

Did corrective action require Engineer's approval? ☑ **Yes** ☐ **No**

If so, name of Engineer providing approval: Ron Matin **Date:** 21-Jul-2008

Is Engineer's approval attached? ☐ **Yes** ☑ **No** See response to ABF-RFI-001443R00.

Comments:
This report is for the purpose of determining conformance with the contract documents and is not for the purpose of making repair or fit for purpose recommendations. Should you require recommendations concerning repairs or remedial efforts please contact Venktaesh Iyer, (858) 967-6363, who represents the Office of Structural Materials for your project.

Inspected By:	Petrina,Markian	Quality Assurance Inspector
Reviewed By:	Iyer,Venkatesh	QA Reviewer

REQUEST FOR INFORMATION (RFI)

RFI No.: ABF-RFI-001443R00 **Submitted By:** Mackey, Kim **Pages:** 1
Pages Attached: 0

RFI Date: 17-July-2008 **Contact Name:** Kanapicki, Charles **Phone No.** (510) 808-4600

Subject: Bike Path Anchor Bolt Nuts

References:

Sub/Sup: DYS **Sub RFI #:**

Response Required by: 24-July-2008 **Response affects critical path activity?** No

Description:

ABFJV understand that the Bike Path Anchor Bolt nuts field sampled and Translab tested within the past week failed the GO gage test.

Is it acceptable to the Engineer that nuts be determined fit for use if they can be freely threaded on the anchor bolts?

Contractor Disposition:

This RFI is being submitted for:

The Cost and Time Impact from this RFI is: Not selected

Response: **Agreed Ext. Due Date:**

Pages: 1
Pages Attached: 0

The Contractor's attention is directed to NCR No.'s DYSN-0002 and DYSN-0003 issued on July 21, 2008. The Department will accept and field release the A 563M nuts with non-conforming threads as "fit for purpose." Release of this material by the Department should not be taken as an indication of accepted practice in the future.

Administrative Action:

This response resolves the RFI.

Date: 22-July-2008	**Respondent:** Matin, Ron	**Phone No.:** 510-808-4611

DEPARTMENT OF TRANSPORTATION
DIVISION OF ENGINEERING SERVICES
Office of Structural Materials
Quality Assurance and Source Inspection

Bay Area Branch
690 Walnut Ave.St. 150
Vallejo, CA 94592-1133
(707) 649-5453
(707) 649-5493

Contract #: 04-0120F4
Cty: SF/ALA Rte: 80 PM: 13.2/13.9
File #: xx.25A

QUALITY ASSURANCE -- NON-CONFORMANCE RESOLUTION

Location: Dyson Corporation, Painesville, OH
Prime Contractor: American Bridge/Fluor Enterprises, a JV
Submitting Contractor: Dyson Corp. & Subs

Report No: NCS-000061
Date: 30-Jul-2008
NCR #: DYSN-0002

Type of problem:

Welding	☐	**Concrete**	☐	**Other**	☑	
Welding	☐	**Curing**	☐	**Procedural**	☐	**Bridge No:** 34-0006
Joint fit-up	☐	**Coating**	☐	**Other**	☐	**Component:**
Procedural	☐	**Procedural**	☐	**Descripton:**		

Date the Non-Conformance Report was written: 11-Jul-2008

Description of Non-Conformance:

The Dyson Corporation Quality Control Manager (QCM) allowed submission of a Certificate of Compliance (COC) denoting conformance with a nonexistent specification: ASTM A 354 Grade BD, M30 (30 mm diameter); however, no Metric specifications exist for A 354.

The bolts were fabricated to A 354BD material standards, for which they passed Quality Control (QC) testing; threading and dimensions are apparently to A 325M.

Contract Plans (CP) Sheet 830 calls for a 30 mm diameter A 354BD bolt. Since A 354 does not have a Metric version, per CP notes sheet 423, the Contractor should have provided A 354BD bolts, inch diameter verified with Design.

Contractor's proposal to correct the problem:

Accept the bolts as "fit for purpose," as they pass mechanical testing and A 563M nuts can be threaded onto the bolts without excessive force.

Corrective action taken:

The contractor provided the correct COC's.

Did corrective action require Engineer's approval? ☐ **Yes** ☑ **No**

If so, name of Engineer providing approval: **Date:**

Is Engineer's approval attached? ☐ **Yes** ☑ **No**

Comments:

This report is for the purpose of determining conformance with the contract documents and is not for the purpose of making repair or fit for purpose recommendations. Should you require recommendations concerning repairs or remedial efforts please contact Venkatesh Iyer (858) 967-6363, who represents the Office of Structural Materials for your project.

QUALITY ASSURANCE -- NON-CONFORMANCE RESOLUTION

(Continued Page 2 of 2)

Inspected By:	Petrina,Markian	Quality Assurance Inspector
Reviewed By:	Iyer,Venkatesh	QA Reviewer

DEPARTMENT OF TRANSPORTATION
DIVISION OF ENGINEERING SERVICES
Office of Structural Materials
Quality Assurance and Source Inspection

Bay Area Branch
690 Walnut Ave.St. 150
Vallejo, CA 94592-1133
(707) 649-5453
(707) 649-5493

Contract #: 04-0120F4
Cty: SF/ALA Rte: 80 PM: 13.2/13.9
File #: xx.25B

MATERIAL SUITABILITY DOCUMENTATION REPORT

Prime Contractor: American Bridge/Fluor Enterprises, a JV
Contractor: Dyson Corp. & Subs
Location: Dyson Corporation, Painesville, OH

Report No: MSD-000326
Date: 22-Sep-2008
BTL Mat Des.:
BTL Item No.:

Initiated By/Why: DYSN-0005Nonconforming Material

BTL Summary:

Per Trans Lab QA testing, Dyson Corporation has provided nonconforming material (3rd time since November, 2007):
1) Anchor rods: 2 of 7 heats failed ASTM A 354 Grade BD elongation (14% in 2 inches); Heat Treatment Lots MJF 26 and MJF 30 both had 13.45%.
2) Nuts: Low hardness; Rockwell C 24 to 38 (C24 to C38) required; lot average C20.4.

METS Comments

METS Discussion:

Anchor rods had more variation than the results might suggest. Two samples for each lot were averaged for elongation in two inches. Lot MJF 26 elongation for two different samples was 13.3 and 13.6 percent; for MJF 30, 12.5 and 14.4 percent.

The individual nuts had the following hardness readings on the Rockwell C scale: C18.1, C20.5, C22.1. One nut had variances between C16 and C37. Of note, Dyson's own stated standard tolerance is ±C2, and only one of these nuts would have met the C24 minimum, and only barely. The average, C20.4, is nowhere near Dyson's own tolerance or ASTM standards.

For QA testing, Dyson provided a 1200 mm rod, threaded on one end, per Department instructions. Nuts underwent tensile testing by being threaded onto the rods, which were "pulled" in a 2 million pound test machine. Three (3) nuts were tested with seven (7) rods, meaning that each nut was "pulled" at least twice. In all seven tests, the 3-inch bar ruptured without the nuts failing.

Dyson provided nonconforming material on two previous occasions:
November, 2007: ASTM A 563 2-inch nuts with insufficient hardness; barely-conforming A 722 threads ("rod deformations"). The nuts were returned by ABF and new nuts fabricated with adequate hardness. The rejected nuts could not be tensile tested properly because a) 2 inch nuts require special apparatus for individual tensile testing, and Trans Lab does not have this expensive specialty item; b) when tensile tested along with A 722 rods, the rod and nut threads appeared to fail simultaneously, negating the results: the nuts should fail later.
July, 2008: ASTM A 563M nuts with excessive thread thickness; barely-conforming A 354 BD "M30" threads. Since the over-thick nuts were able to thread onto the almost-too-thin bolt threads, the material was accepted as "fit for purpose."

Proposed Resolution:

MATERIAL SUITABILITY DOCUMENTATION REPORT

Accept all material "as is." Rods pass yield and tensile testing, making them acceptable to Design; nuts passed tensile testing, overriding hardness testing.

Date discussed with the Construction Engineer: 16-Sep-2008 **Time:** 1400 **Various:**

Construction Comments

Name of the Construction Engineer involved: Brian Boal

Construction agrees with METS recommendation: ☑ **Yes** ☐ **No**

Recommendationfrom Construction (If NO is checked above):

ABF-NPR-000169R00; NCT-0170 (23-Sep-2008)

Contract Change Order required: ☐ **Yes** ☑ **No** **If Yes, CCO number:**

Designer Comments

Name of Design Engineer involved (if applicable): James Duxbury

Recommendation from the Design Engineer (if applicable):

Material is acceptable, since yield and tensile strengths are satisfactory.

Screening Team involvement: ☐ **Yes** ☑ **No**

Issue requires FAST Involvement: ☐ **Yes** ☑ **No**

Decision by FAST (if YES is checked above):

N/A

METS Summary of Final Decision:

N/A

Comments:

This report is for the purpose of determining conformance with the contract documents and is not for the purpose of making repair or fit for purpose recommendations. Should you require recommendations concerning repairs or remedial efforts please contact Venkatesh Iyer, (858) 967-6363, who represents the Office of Structural Materials for your project.

Inspected By:	Iyer,Venkatesh	Quality Assurance Inspector
Reviewed By:	Iyer,Venkatesh	QA Reviewer

DEPARTMENT OF TRANSPORTATION
DIVISION OF ENGINEERING SERVICES
Office of Structural Materials
Quality Assurance and Source Inspection

Bay Area Branch
690 Walnut Ave.St. 150
Vallejo, CA 94592-1133
(707) 649-5453
(707) 649-5493

Contract #: 04-0120F4
Cty: SF/ALA Rte: 80 PM: 13.2/13.9
File #: 76.15

SOURCE INSPECTION REPORT

Resident Engineer: Pursell, Gary
Address: 333 Burma Road
City: Oakland, CA 94607

Report No: SIR-000595
Date Inspected: 28-May-2009

Project Name: SAS Superstructure
Prime Contractor: American Bridge/Fluor Enterprises, a JV
Contractor: Dyson Corp. & Subs

OSM Arrival Time: 900
OSM Departure Time: 1300
Location: Painesville, OH

Quality Control Contact: Dave Sukenik
Quality Control Present: ☑ Yes ☐ No
Material transfer: ☑ Yes ☐ No ☐ N/A
Sampled Items: ☑ Yes ☐ No ☐ N/A
Stock Transfer: ☐ Yes ☐ No ☑ N/A
OK to Cut: ☐ Yes ☐ No ☑ N/A
Rebar Test Witness: ☐ Yes ☐ No ☑ N/A
Delayed/Cancelled: ☐ Yes ☑ No ☐ N/A
Other: Quality Surveillance of Machining Activities
Bridge No: 34-0006
Component: Stainless Steel Tie rods & M30 Bolt
Bid Item: 45, 61
Lot No: B201-010-09, B201-011-09, B201-012-09

Summary of Items Observed:

The Caltrans Office of Structural Materials (OSM) Quality Assurance (QA) Inspector Andrew Webster was present at Dyson Corporation to randomly observe and document the operations and Quality Control (QC) functions relative to the project. This QA Inspector met with Dyson's QC Manager, Dave Sukenik who escorted the QA Inspector to the shop floor to view the current work in process. While on site, the QA Inspector noted the following work being performed.

This QA Inspector was requested by Dyson Corporation to release to Lubrite Technologies the 1.00"-8UNC-2A x 68.50" double end stainless steel tie rod assemblies. This QA Inspector noted a total of 16 tie rod assemblies per the contract. This QA Inspector noted that all assemblies appeared to meet the contract requirements at time of inspection. The assemblies were green tagged (Lot # B201-010-09) by this QA Inspector see TL-6011. See attached photos.

This QA Inspector was also requested by Dyson to sample M30 galvanized bolts for acceptance tests prior to release to American Bridge/Flour Enterprises, a JV. The QA Inspector noted two lots of bolts, lot # LNX14 had seven total bolts (Lot # B201-011-09) and lot # LNX15 had eight total bolts (Lot # B201-012-09). This QA Inspector sampled three bolts with washers and nuts from each lot. These six full sets were then shipped with a TL-0101 and proper paper work (for each lot) by Dyson Corp. to the California Trans. Lab. After the sampling is done by the Trans. Lab and approval is given the parts can then be released to American Bridge/Flour Enterprises, a JV. See TL-102. See attached photos.

SOURCE INSPECTION REPORT

(Continued Page 2 of 2)

Summary of Conversations:

As noted in the body of the report above. Other basic communication was performed between the QA Inspector and the QC Inspector during the observations.

Comments

This report is for the purpose of determining conformance with the contract documents and is not for the purpose of making repair or fit for purpose recommendations. Should you require recommendations concerning repairs or remedial efforts please contact Nina Choy, (510) 385-5910, who represents the Office of Structural Materials for your project.

Inspected By:	Webster,Andrew	Quality Assurance Inspector
Reviewed By:	Levell,Bill	QA Reviewer

State of California
Department of Transportation

Structural Materials Testing Laboratory
5900 Folsom Boulevard, Sacramento, CA 95819

TEST REPORT

ACCREDITED
CERTIFICATE NO. 2364.01

Remarks ref: ASTM A354, A563m, F436m, A153, TM03. Bolt Lot #LNX14, Nut Lot #LLE, Washer Lot #C1114. Nut Lot LLE FAILS - Does Not Accept GO-Gage (MRB)

Sample No: SM-09-0481
Date Sampled: 05/28/09 **Date Rec'd:** 06/02/09 **Date Reported:** 06/04/09
Lot No: B20101109 **TL-101 / SIC No:** C725880
Contract/Permit No: 04-0120F4
Material: A354 Grade BD 30mm X 460mm Bolts w/Nuts & Washers
Manufacturer: Dyson, PST
Sampler: Andrew Webster 6-4-09

Results: **Nut Lot #LLE Does Not Comply With Specifications. Bolt Lot #LNX14 & Washer Lot #MRB Are Satisfactory For Use.**

SOURCE	DISTRICT	E.A.	SUB JOB	SPECIAL DESIGNATION	OBJECT
59318	04	0120F3			1270

STATE OF CALIFORNIA • DEPARTMENT OF TRANSPORTATION
SAMPLE IDENTIFICATION CARD
TL-0101 (REV. 10/97) 09-0481 CARD NUMBER C725880

6/2

☐ PRELIMINARY TESTS
☐ PROCESS TESTS
☒ ACCEPTANCE TESTS
INDEPENDENT ASSURANCE TESTS
☐ DIST. LAB
☒ TRANS. LAB
☐ SPECIAL TESTS

SAMPLE SENT TO:
☒ HDQTRS. LAB
☐ BRANCH LAB
☐ DIST. LAB

FIELD NO.
DIST. LAB NO.
LOT NO. B201-011-09
SHIPMENT NO.
P.O. OR REQ. NO.
AUTHORIZATION NO.

SAMPLE OF 1120 x 35-bes x 460mm galvanized hex
FOR USE IN Bolt Lot LNX14
SFOBB
SAMPLE FROM Dyson Corporation
DEPTH
LOCATION OF SOURCE Dyson Corporation Perrysville, OH
THIS SAMPLE IS SHIPPED IN (NO. CONTAINERS) 1
AND IS ON E OF A GROUP OF 3
SAMPLES REPRESENTING (TONS, GALS, BBLS, STA. ETC.) 10
OWNER OR MANUFACTURER Dyson Corporation
TOTAL QUANTITY AVAILABLE 3
TEST RESULTS DESIRED ☐ NORMAL ☐ PRIORITY
DATE NEEDED
REMARKS Test per Spec
COVER ADDITIONAL INFORMATION WITH LETTER
DATE SAMPLEED 28 May 2009
BY Andrew Webster
TITLE QA Inspector
DIST, CO, RTE, PM
LIMITS
CONT. NO. 04-0120F4
FED. NO.
RES. ENGR. OR SUPT. Gary Pierson
ADDRESS
CONTRACTOR ABF/Dyson

ENCLOSE WITH SAMPLE

Print

STRUCTURAL MATERIALS TESTING LABORATORY
FORM TM-3 (REV. 2/05)

FASTENER ASSEMBLY WORKSHEET

APPROVED FOR USE BY SMTL
QUALITY MANAGER:

SM Number 09-0481 Lot Number B20101109 Page 1 of

Contract 04-0120B4 TL-0101 Number C725880 Date Rec'd. 6/2/09 Date Tested: 6/2/09

Bolts: A354 GR. BD Lab Technician: BRUCE

Sample No.	1A	1B	1C							
Mfg. Lot No.	LNX14	—	—							
Product Markings	LNX B0	—	—							
Size	30mm	—	—							
Pitch Diameter										
Bolt Length	460mm	—	—							
Ring Gages/Go Nogo	GO/OK	—	—	✓						
Zinc Coating Thick.	3.13	3.68	4.11 ✓	1A 3.3						
Hardness Rc / Rb	36.47	—	—	38.37						
Wedge Tensile	652.7 ✓	—	—	579 min ✓						

Nuts: A563M 10S

Sample No.	1A	1B	1C							
Mfg. Lot No.	LLE	—	—							
Product Markings	D/N 10 LLE	—	—							
Size	30mm	—	—							
Go / No-Go	GO/NO	—	—	WILL NOT ACCEPT GO GAUGE/ASSEMBLES ON BOLT						
Zinc Coating	3.81	3.70	3.77							
Hardness Rc / Rb	—	—	29.00							
Nut Proof Load	605.7	—	— ✓							

Washer:

Sample No.	1A	1B	1C							
Mfg. Lot No.	MRB	—	—							
Product Markings	P F436M	—	—							
Zinc Coating	3.64	3.49	3.55	✓						
Hardness Rc / Rb	41.10	—	—	✓						

ASTM A354m BD Threaded Bolts and Nuts

Department of Transportation
Structural Materials Laboratory

SM Number = 09-0481

Sample	Mfg_ Lot	Size	Pitch Diameter	Peak Load	Peak Stress	Comments
				(kN)	(kN)	
1A	LNX14	M30		652.7 OK 6°		A354m GR BD
1A	LNX14	30mm Hex		605.7 OK		Nut Proof Load

High-strength hexagon head bolts
with large widths across flats for structural steel bolting

DIN 6914

Sechskantschrauben mit großen Schlüsselweiten;
HV-Schrauben in Stahlkonstruktionen

Supersedes March 1979 edition.

In keeping with current practice in standards published by the International Organization for Standardization (ISO), a comma has been used throughout as the decimal marker.

Dimensions in mm

1 Scope and field of application

High-strength hexagon head bolts are intended for use in GV and SL structural steel bolting in accordance with DIN 18 800 Part 1, together with DIN 6915 hexagon nuts and DIN 6916, DIN 6917 or DIN 6918 washers.

2 Dimensions

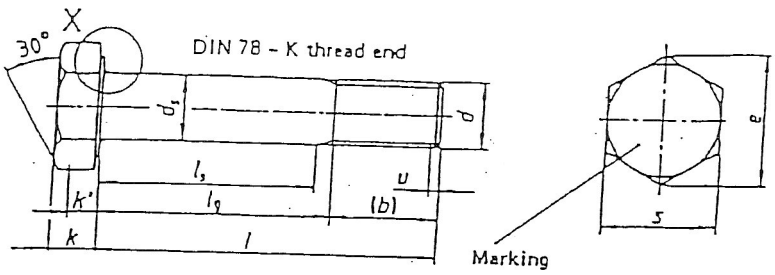

$u = 2P$ maximum; incomplete thread.

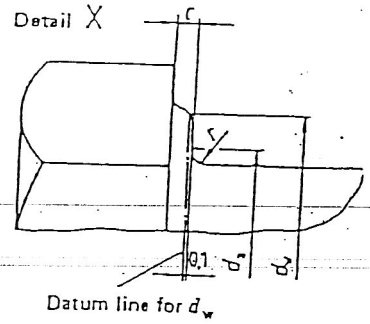

Dim Letter	MM	INCHES
P	3.5	0.138
b	150	5.906
c min	0.4	0.016
c max	0.8	0.031
da max	35	1.378
ds min	29.16	1.148
ds max	30.84	1.214
dw min	47.5	1.87
e min	55.37	2.18
k min	17.95	0.707
k max	20.05	0.789
k' min	12.56	0.494
r min	2	0.079
s max	50	1.969
s min	49	1.929
l min	455.4	17.929
l max	464.6	18.291
lg max	310	12.205
ls min	299.5	11.791

S/o # L101178

(M30 x 460 ABF)

NOTICE: THIS MATERIAL MAY BE PROTECTED COPYRIGHT LAW (TITLE 17 U. S. CODE).

No part of this standard may be reproduced without the prior permission of DIN Deutsches Institut für Normung e.V., Berlin. In case of doubt, the German-language original should be consulted as the authoritative text.

Beuth Verlag GmbH, Berlin, has the exclusive right of sale for German Standards (DIN-Normen).
04.90

DIN 6914 Engl. Price group 6
Sales No. 0108

DIN 6914 89 ■ 2794446 0021046 4 ■

by the DIN Deutsches Institut Fur Normung E V
-05 1999

State of California
Department of Transportation

Structural Materials Testing Laboratory
5900 Folsom Boulevard, Sacramento, CA 95819

TEST REPORT

ACCREDITED
CERTIFICATE NO: 2364.01

Remarks ref: ASTM A354m, A563m, F436m, A153, TM03. Bolt Lot #LNX15, Nut Lot #LLE, Washer Lot #MRB (C1114). Nut Lot #LLE FAILS - Does Not Accept GO-Gage

Sample No: SM-09-0482
Date Sampled: 05/28/09 **Date Rec'd:** 06/02/09 **Date Reported:** 06/04/09
Lot No: B20101209 **TL-101 / SIC No:** C725881
Contract/Permit No: 04-0120F4
Material: A354 Grade BD 30mm X 460mm Bolts w/Nuts & Washers
Manufacturer: Dyson, PST
Sampler: Andrew Webster 6-4-09

Results: **Nut Lot #LLE Does Not Comply With Specifications. Bolt Lot #LNX15 & Washer Lot MRB Are Satisfactory For Use.**

SOURCE	DISTRICT	E.A.	SUB JOB	SPECIAL DESIGNATION	OBJECT
59318	04	0120F3			1270

STATE OF CALIFORNIA • DEPARTMENT OF TRANSPORTATION
SAMPLE IDENTIFICATION CARD CARD NUMBER C725881
TL-0101 (REV. 10/97) 09-0482 6/2

☐ PRELIMINARY TESTS
☐ PROCESS TESTS
☒ ACCEPTANCE TESTS
INDEPENDENT ASSURANCE TESTS
☐ DIST. LAB
☒ TRANS. LAB
☐ SPECIAL TESTS

SAMPLE SENT TO:
☒ HDQTRS. LAB
☐ BRANCH LAB
☐ DIST. LAB

FIELD NO.
DIST. LAB NO.
LOT NO. B20101-012-09
P.O. OR REQ. NO.
SHIPMENT NO.
AUTHORIZATION NO.

SAMPLE OF A354 x 30 x 460mm galvanized hex
FOR USE IN bolt Lot LNX15
SR 0482
SAMPLE FROM Dyson corporation
DEPTH
LOCATION OF SOURCE Dyson Corporation Painesville, OH

THIS SAMPLE IS SHIPPED IN (NO. CONTAINERS) 1 AND IS ON E OF A GROUP OF 3 SAMPLES REPRESENTING (TONS, GAL., BBLS, STA. ETC.) 18
OWNER OR MANUFACTURER Dyson Corporation
TOTAL QUANTITY AVAILABLE 3 TEST RESULTS DESIRED ☐ NORMAL ☐ PRIORITY DATE NEEDED
REMARKS Test per spec

COVER ADDITIONAL INFORMATION WITH LETTER
DATE SAMPLED 28 May 2009
BY Andrew Webster TITLE QA Inspector
DIST, CO, RTE, PM
LIMITS
CONT. NO. 04-0120F4
FED. NO.
RES. ENGR. OR SUPT. Gary Purser
ADDRESS
CONTRACTOR AGF/Dyson

ENCLOSE WITH SAMPLE

Print

STRUCTURAL MATERIALS TESTING LABORATORY
FORM TM-3 (REV. 2/05)

FASTENER ASSEMBLY WORKSHEET

APPROVED FOR USE BY SMTL
QUALITY MANAGER:

SM Number C9-0482 Lot Number B20101209 Page 1 of

Contract 04-0120F4 TL-0101 Number C725881 Date Rec'd. 6/2/09 Date Tested: 6/2/09

Bolts: A354M GR. BD Lab Technician: BRUCE

Sample No.	2A	2B	2C							
Mfg. Lot No.	LNX15	—	—							
Product Markings	BD LNX15	—	—							
Size	30 MM	—	—							
Pitch Diameter										
Bolt Length	460 MM	—	—							
Ring Gages/Go Nogo	GO/OK	—	—	✓						
Zinc Coating Thick.	2.49	3.42	3.18 ✓	2A 6B						
Hardness Rc / Rb	~~41.05~~	—	—	40.42						
Wedge Tensile	682.8 ✓	—	—	~~45.5~~	579 min					

Nuts: A563M 10 S

Sample No.	2A	2B	2C							
Mfg. Lot No.	LLE	—	—							
Product Markings	O/N LLE 10	—	—							
Size	30 MM	—	—							
Go / No-Go	GO/NO	—	—	WILL NOT ACCEPT GO GAUGE/ASSEMBLIES ON BOLT						
Zinc Coating	4.82	~~4.28~~ 4.48	4.29 ✓							
Hardness (Rc) / Rb	—	—	31.42							
Nut Proof Load	6078	—	—	✓						

Washer:

Sample No.	2A	2B	2C							
Mfg. Lot No.	MRB	—	—							
Product Markings	P F436	—	—							
Zinc Coating	4.01	3.10	3.21	✓						
Hardness (Rc) / Rb	41.20	—	~~41.2~~ 43	✓						

ASTM A354m BD Threaded Bolts and Nuts

Department of Transportation
Structural Materials Laboratory

SM Number = 09-0482

Sample	Mfg_ Lot	Size	Pitch Diameter	Peak Load (kN)	Peak Stress (kN)	Comments
2A	LNX15	M30		682.8 OK 6°		A354m GR BD
2A	LNX15	30mm Hex		607.8 OK		Nut Proof Load

High-strength hexagon head bolts

with large widths across flats for structural steel bolting

DIN 6914

Sechskantschrauben mit großen Schlüsselweiten; HV-Schrauben in Stahlkonstruktionen

Supersedes March 1979 edition.

In keeping with current practice in standards published by the International Organization for Standardization (ISO), a comma has been used throughout as the decimal marker.

Dimensions in mm

1 Scope and field of application

High-strength hexagon head bolts are intended for use in GV and SL structural steel bolting in accordance with DIN 18 800 Part 1, together with DIN 6915 hexagon nuts and DIN 6916, DIN 6917 or DIN 6918 washers.

2 Dimensions

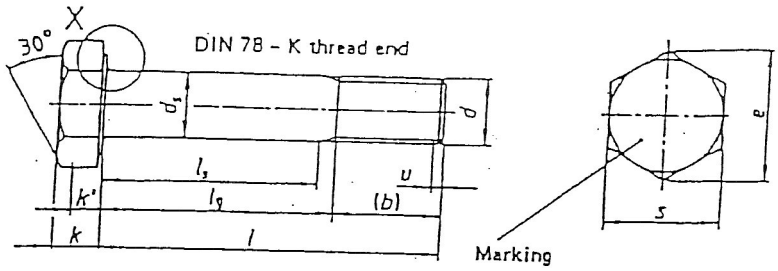

$u = 2P$ maximum; incomplete thread.

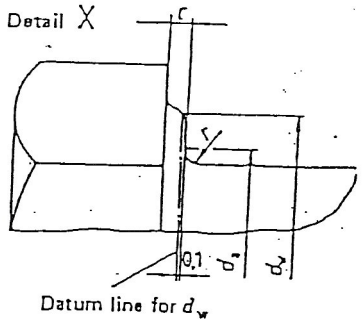

Dim Letter	MM	INCHES
P	3.5	0.138
b	150	5.906
c min	0.4	0.016
c max	0.8	0.031
da max	35	1.378
ds min	29.16	1.148
ds max	30.84	1.214
dw min	47.5	1.87
e min	55.37	2.18
k min	17.95	0.707
k max	20.05	0.789
k' min	12.56	0.494
r min	2	0.079
s max	50	1.969
s min	49	1.929
l min	455.4	17.929
l max	464.6	18.291
lg max	310	12.205
ls min	299.5	11.791

S/o #L 101180

(M30 x 460 ABF)

NOTICE: THIS MATERIAL MAY BE PROTECTED BY COPYRIGHT LAW (TITLE 17 U. S. CODE).

No part of this standard may be reproduced without the prior permission of DIN Deutsches Institut für Normung e.V., Berlin. In case of doubt, the German-language original should be consulted as the authoritative text.

Beuth Verlag GmbH, Berlin, has the exclusive right of sale for German Standards (DIN-Normen).
04.90

DIN 6914 Engl. Price group 6
Sales No. 0108

DIN 6914 89 ■ 2794446 0021046 4 ■

y the DIN Deutsches Institut Fur Normung E V
-05 1999

DEPARTMENT OF TRANSPORTATION
DIVISION OF ENGINEERING SERVICES
Office of Structural Materials
Quality Assurance and Source Inspection

Bay Area Branch
690 Walnut Ave.St. 150
Vallejo, CA 94592-1133
(707) 649-5453
(707) 649-5493

Contract #: 04-0120F4
Cty: SF/ALA Rte: 80 PM: 13.2/13.9
File #: 76.15

SOURCE INSPECTION REPORT

Resident Engineer: Pursell, Gary
Address: 333 Burma Road
City: Oakland, CA 94607

Report No: SIR-000660
Date Inspected: 15-Jun-2009

Project Name: SAS Superstructure
Prime Contractor: American Bridge/Fluor Enterprises, a JV
Contractor: Dyson Corp. & Subs

OSM Arrival Time: 900
OSM Departure Time: 1300
Location: Painesville, OH

Quality Control Contact: Dave Sukenik
Quality Control Present: ☑ Yes ☐ No
Material transfer: ☑ Yes ☐ No ☐ N/A
Sampled Items: ☑ Yes ☐ No ☐ N/A
Stock Transfer: ☐ Yes ☐ No ☑ N/A
OK to Cut: ☐ Yes ☐ No ☑ N/A
Rebar Test Witness: ☐ Yes ☐ No ☑ N/A
Delayed/Cancelled: ☐ Yes ☑ No ☐ N/A
Other: Quality Surveillance of Machining Activities
Bridge No: 34-0006
Component: M30 bolt assemblies & 1.00” galvanized tie ro
Bid Item: 57 and 45
Lot No: B201-013-09 and B201-014-09

Summary of Items Observed:

The Caltrans Office of Structural Materials (OSM) Quality Assurance (QA) Inspector Andrew Webster was requested by Dyson Corporation to observe and document the operations and Quality Control (QC) functions relative to the project at their facility.

This QA Inspector was traveled to Dyson Corporation and met with QC Inspector Dave Sukenik upon arriving. This QA Inspector reviewed the reports for the M30 galvanized hex bolts (for the bike path) that were ready to be shipped to the job site. After reviewing the reports this QA Inspector preceded to tag the parts for release. This QA Inspector tagged the parts with a Blue Material Suitability Tag (Lot # B201-013-09) per the TL-6013 on these parts. The TL-6013 stated that the nuts failed the go-gage test but the actual components appeared to assemble properly and that is was recommended to accept these high-strength bolt assembly lots as fit-for-purpose. This QA Inspector witnessed the six bolt assemblies get boxed and this QA Inspector places the blue tag on the package. See TL-6014 and attached photos.

This QA Inspector was also asked to sample forty four 1.00”-8UNC-2A x 28.875” galvanized tie rod assemblies heat # 8990895 (for the Pier E2 Bearing Housings). After reviewing the reports for the tie rods, nuts and washers this QA Inspector proceeded to sample five (Lot # B201-014-09) of the forty four assemblies per the Special Provisions page 297 Bolt Sample Size table. This QA Inspector then labeled each sample with the lot number and the date. See TL-101 and attached photos.

SOURCE INSPECTION REPORT

(Continued Page 2 of 2)

Summary of Conversations:

As noted in the body of the report above. Other basic communication was performed between the QA Inspector and the QC Inspector during the observations.

Comments

This report is for the purpose of determining conformance with the contract documents and is not for the purpose of making repair or fit for purpose recommendations. Should you require recommendations concerning repairs or remedial efforts please contact Nina Choy, (510) 385-5910, who represents the Office of Structural Materials for your project.

Inspected By:	Webster,Andrew	Quality Assurance Inspector
Reviewed By:	Levell,Bill	QA Reviewer

DEPARTMENT OF TRANSPORTATION
DIVISION OF ENGINEERING SERVICES
Office of Structural Materials
Quality Assurance and Source Inspection

Bay Area Branch
690 Walnut Ave.St. 150
Vallejo, CA 94592-1133
(707) 649-5453
(707) 649-5493

Contract #: 04-0120F4
Cty: SF/ALA Rte: 80 PM: 13.2/13.9
File #: 76.25A

MATERIAL SUITABILITY REPORT

Resident Engineer: Pursell, Gary
Address: 333 Burma Road
City: Oakland, CA 94607

Report No: MSR-000006
Report Date: 15-Jun-2009
SMR Authorization #:

Project Name: SAS Superstructure
Prime Contractor: American Bridge/Fluor Enterprises, a JV
Contractor: Dyson Corp. & Subs

Date of NCR:
Location: Painesville, OH

The following material has been inspected and found not to comply with contract plans and specifications; however, METS has determined this material may be suitable for its intended purpose.

Lot #	Bid Item #	Quantity		Material Description
B201-013-09	57	6	ea	M30 x 3.5-6g x 460mm lg hex bolt assemblies

Identification:
On the outside of the shipping box in plastic bag.

Description of Non-Conformance (NCRs):

Summary of Items Observed:
The TL-6013 stated that the nuts failed the go-gage test but the actual components appeared to assemble properly and that is was recommended to accept these high-strength bolt assembly lots as fit-for-purpose.

Summary of Conversations:
As noted in the body of the report above. Other basic communication was performed between the QA Inspector and the QC Inspector during the observations.

Comments
This report is for the purpose of determining conformance with the contract documents and is not for the purpose of making repair or fit for purpose recommendations. Should you require recommendations concerning repairs or remedial efforts please contact Anthony Mullen (510) 414-6904, who represents the Office of Structural Materials for your project.

Inspected By:	Webster,Andrew	Quality Assurance Inspector
Reviewed By:	Levell,Bill	QA Reviewer

CERTIFIED TEST REPORT

DYSON CORP.

DTN DOMESTIC NUT

53 Freedom Road
Painesville, OH 44077

440-946-3500
440-352-2700 fax

DYSON ORDER#	CUSTOMER ORDER#	ITEM NUMBER	QUANTITY SHIPPED	DATE SHIPPED
L 91397	660110-SA-017	19 of 34	4 pcs	11/14/07

CUSTOMER
American Bridge / Fluor JV
375 Burma Road
Oakland, CA 94607

USA

DRAWING
829C

PRODUCT DESCRIPTION
M30 x 3.5-6g x 420mm lg. hex bolt per DIN 6914 w/115mm useable thread. Reference Sheet # 829C of 1204. HDG per ASTM-A123 w/near white blast. Bike Path (Third Attachment) / Bid Item 58

SPECIFICATIONS
ASTM-A354-04 Grade BD with special provisions 10-1.59, 10-1.60, 10-1.61 std specifications 75-1.05

STARTING MATERIAL	DIA	GRADE	QTY	LOT CODE	HEAT NO.	ORIGINAL MILL
Round Bar	1.187	4140	4	LNX8	704380	Alton Steel

The product listed above was manufactured, tested, sampled, and inspected in accordance with the specification, purchase order, and any supplementary requirements and was found to meet those requirements unless otherwise noted.

1. The steel was melted and manufactured in the USA and the product was manufactured and tested in the USA.
2. Heat treat data: Austenitized at 1580 deg. F. for 2-1/2 hours and oil quenched and tempered at 1050 deg. F. for 2-1/2 hours and air cooled.
3. Hardness Results (2 samples): 341 HBW, 341 HBW
4. These ASTM-A354-04 Grade BD fasteners conform to the provisions of ASTM-A143.

Attachments:
Mill Test Report
Mechanical Test Report
Galvanizing Certification
Embrittlement Test Report

Deborah A. Smith
Q.A. Admin. Assistant
11/14/07

CERTIFIED MILL TEST REPORT

ASI ALTON STEEL, INC

Alton Steel Test Lab
#5 Cut Street
Alton, IL. 62002-9011
(618) 463-4490 EXT 2486
(618) 463-4491 (Fax)

CODE LNX8

BILL TO

The Dyson Corporation
53 Freedom Road
Painesville, OH 44077

SHIP TO

The Dyson Corporation
53 Freedom Road
Painesville, OH 44077

Date	05/17/2007	Customer PO	53622-1	**Specifications**
ASI Ord No.	16173	Customer PT.		SAE 4140
ASI Ord Line Item	1			

Item Description
Steel Bar, Hot Rolled, 1.1870, 20' 0 "

Heat Number

Strand Cast, RR = 44.28:1

Heat Number	Yield PSI	Tensile PSI	% Elongation	% ROA	Bend Test

CHEMICAL ANALYSIS TEST METHODS ASTM E-415 & E-1019

Heat Number	C	Mn	P	S	Si	Cu	Ni	Cr	Mo	Sn	Al	Nb/Cb	V	B	Ti	N	Ca
704380	0.42	0.81	0.015	0.026	0.28	0.26	0.090	0.936	0.164	0.015	0.003	0.027	0.005	0.0002	0.0024	0.0099	0.0014

JOMINY HARDENABILITY USING ASTM A-255 CALCULATED FROM CHEMICAL DI

Heat Number	GS	DI
704380	8	5.01

SPECIAL TEST RESULTS

ADDITIONAL COMMENTS

No mercury, lead, radium, of alpha containing material or equipment is used or deliberately added in the production of this steel. No weld or weld repairs were performed on this material. This Steel is 100% Electric Arc Furnace Melted and Rolled in the U.S.A.

Alteration or reproduction of this report, except in full, is not allowed without written approval by a representative of Alton Steel Incorporated.

Subscribed and sworn to before me, a Notary Public, in and for the county of Madison, State of Illinois

this _____ Day of _____

My commission expires_____

(Notary Public)

I hereby certify that the above tests are correct as contained in the records of ALTON STEEL INCORPORATED

Quality Leader: Rubert Cauley

R Cauley

Q.A. REVIEWED
DATE 6/1/07
DYSON

LNX

STORK
Materials Technology

Stork Herron Testing Laboratories

9/19/2007

Debbie Smith
Dyson Corp
53 Freedom Rd
Painesville, OH 44077-1232

Date Received: 9/17/2007

Test Report No.: DYS006-07-09-45214-1

P.O. No.: 56041

Material Testing and Non-Destructive Testing

5405 E. Schaaf Road
Cleveland, OH 44131
USA

Telephone : (216) 524-1450
Fax : (216) 524-1459
Website : www.storkherron.com

TEST REPORT

Sample Description: One (1) M30 X 3.5-6g X 420mm Hex Bolt, Heat#: 704380, Heat Code: LNX8, Job # L91397, Customer PO# 660110-SA-017, Spec. ASTM A354, Grade BD

MECHANICAL TESTING PER ASTM F606-06, ASTM A370-06

	Full Size Yield .2% offset		Ultimate Strength with a 6° Wedge	
	(Lbs.)	(psi)	(Lbs.)	(psi)
Results:	140000	161000	140200	161000
Required:	-	130000 Min.	130500 Min.	-

The sample fractured in the threads.

CONFORMANCE

Sample test data is in conformance with customer requirements listed above.

QUALITY ASSURANCE STATEMENT

The above services were performed in accordance with Herron Testing Laboratories' Quality Assurance Program Edition #1, Revision 2 dated 1/30/07 as audited and approved by Dyson Corporation on 3/12/07.
This material was not contaminated by mercury or chlorinated solvents during the handling and processing at Stork-Herron Testing Laboratories facilities.

The reported results represent the actual attributes of the material tested and indicate full compliance with all applicable specification and contract requirements.

The above services were performed in accordance with Herron Testing Laboratories' Quality Assurance Program Edition 1, Revision 2 dated 1/30/07. Information and statements in this report are derived from material, information and/or specifications furnished by the client and exclude any expressed or implied warranties as to the fitness of the material tested or analyzed for any particular purpose or use. This report is the confidential property of our client and may not be used for advertising purposes. This report shall not be reproduced except in full, without written approval of this laboratory. The recording of false, fictitious or fraudulent statements or entries on this document may be punished as a felony under Federal Statutes including Federal Law Title 18, Chapter 47.
Sample remnants are held for a minimum of 30 days following issuance of test results, at which point they will be discarded unless notified in writing by the client. This material was not contaminated by mercury or chlorinated solvents during the handling and processing at Stork-Herron Testing Laboratories facilities.

Michael R. Gaydos
General Manager, COO

56041

DATE 9/19/2007

THE ART GALVANIZING WKS., INC.

3935 VALLEY ROAD-CLEVELAND,OHIO 44109 PHONE 216-749-0020

PACKING SLIP/CERTIFICATIONS

TO DYSON CORP PO# 56064

NOTE: THE FOLLOWING MATERIAL HAS BEEN HOT DIP GALVANIZED TO ASTM-A 153 OR ASTM-A 123 (LATEST REVISION) SPECIFICATIONS AS APPLICABLE. A COPY OF THE ABOVE PURCHASE ORDER IS AN INTEGRAL PART OF THIS CERTIFICATION AND SHOULD BE ATTACHED.

S/O L91385
M30-3.5-6GX435MM HEX BOLT
26PCS
GALV WEIGHT 151#

INCHES	OZ/SQ FT
0.0064	3.76
0.007	4.12
0.0072	4.24
0.0074	4.35
0.0078	4.59
AVG	4.21

S/O L91396
M30-3.5-6GX460MM HEX BOLT
19PCS
GALV WEIGHT 124#

INCHES	OZ/SQ FT
0.0058	3.41
0.006	3.53
0.0066	3.88
0.007	4.12
0.0072	4.24
AVG	3.84

S/O L91397
M30-3.5-6GX420MM HEX BOLT
6PCS
GALV WEIGHT 34#

INCHES	OZ/SQ FT
0.006	3.53
0.0062	3.65
0.0064	3.76
0.0068	4.00
0.007	4.12
AVG	3.81

S/O L91398
M30-3.5-6GX560MM HHB
7PCS
GALV WEIGHT 51#

INCHES	OZ/SQ FT
0.0044	2.59
0.006	3.53
0.0062	3.65
0.0064	3.76
0.0066	3.88
AVG	3.48

S/O L91404
M24-3-6GX300MM HX BOLT
56PCS
GALV WEIGHT 165#

INCHES	OZ/SQ FT
0.006	3.53
0.0062	3.65
0.0064	3.76
0.0066	3.88
0.0068	4.00
AVG	3.76

S/O L91409
M24-3-6GX480MM HB
20PCS
GALV WEIGHT 92#

INCHES	OZ/SQ FT
0.0054	3.18
0.0058	3.41
0.006	3.53
0.0064	3.76
0.007	4.12
AVG	3.60

GALV WEIGHT

INCHES	OZ/SQ FT
0	0.00
0	0.00
0	0.00
0	0.00
0	0.00
AVG	0.00

GALV WEIGHT

INCHES	OZ/SQ FT
0	0.00
0	0.00
0	0.00
0	0.00
0	0.00
AVG	0.00

GALV WEIGHT

INCHES	OZ/SQ FT
0	0.00
0	0.00
0	0.00
0	0.00
0	0.00
AVG	0.00

Pat maloney

STORK
Materials Technology

Stork Herron Testing Laboratories

10/1/2007

Debbie Smith
Dyson Corp
53 Freedom Rd
Painesville, OH 44077-1232

Date Received: 9/24/2007

Test Report No.: DYS006-07-09-45658-1

P.O. No.: 56150

Material Testing and Non-Destructive Testing

5405 E. Schaaf Road
Cleveland, OH 44131
USA

Telephone : (216) 524-1450
Fax : (216) 524-1459
Website : www.storkherron.com

TEST REPORT

Sample Description: One (1) M30 X 3.5-6G X 435MM Hex Bolt, Heat #: 704380, Heat Code: LNX6, LNX7, LNX8, LNX9, Material per ASTM A354, Grade BD, Job # L91385,L91396,L91397,L91398, Customer PO# 660110-SA-017

MECHANICAL TESTING PER ASTM F606

Hydrogen Embrittlement Test 4° Wedge Torque Method	
48 Hours	964 Ft. Lbs.
1	Visually Satisfactory

QUALITY ASSURANCE STATEMENT

The above services were performed in accordance with Herron Testing Laboratories' Quality Assurance Program Edition #1, Revision 2 dated 1/30/07 as audited and approved by Dyson Corporation on 3/12/07.

This material was not contaminated by mercury or chlorinated solvents during the handling and processing at Stork-Herron Testing Laboratories facilities.

The reported results represent the actual attributes of the material tested and indicate full compliance with all applicable specification and contract requirements.

The above services were performed in accordance with Herron Testing Laboratories' Quality Assurance Program Edition 1, Revision 2 dated 1/30/07. Information and statements in this report are derived from material, information and/or specifications furnished by the client and exclude any expressed or implied warranties as to the fitness of the material tested or analyzed for any particular purpose or use. This report is the confidential property of our client and may not be used for advertising purposes. This report shall not be reproduced except in full, without written approval of this laboratory. The recording of false, fictitious or fraudulent statements or entries on this document may be punished as a felony under Federal Statutes including Federal Law Title 18, Chapter 47.
Sample remnants are held for a minimum of 30 days following issuance of test results, at which point they will be discarded unless notified in writing by the client. This material was not contaminated by mercury or chlorinated solvents during the handling and processing at Stork-Herron Testing Laboratories facilities.

Michael R. Gaydos
General Manager, COO

56150

T E DYSON CORPORATION

53 Freedom Road
Painesville, Ohio 44077
440.946.3500 / fax 440.352.2700

PACKING SLIP

PO Number	660110-SA-017	Date	11/14/2007	Salesperson	Kristin Price

SOLD TO
American Bridge / Fluor JV
375 Burma Road
Oakland
CA 94607 USA
Buyer:

SHIP TO
American Bridge / Fluor JV
375 Burma Road
Oakland
CA 94607 USA

Shipment No.	Ship Via	Freight	Dyson Rep	Bill of Lading	Terms
95191	CCX	PPD & Chg		21654	Net 30

Item	Description	Job No	Est. Delivery	Quantity	Shipped	Weight (lbs)
7	M30 x 3.5-6g x 435mm lg. hex bolt per DIN 6914 w/150mm useable thread. Reference Sheet #'s 830C, 831C & 832C of 1204. Material per ASTM-A354, gr BD; HDG per ASTM-A153w/near white blast. Special Provisions 10-1.59, 10-1.60 & 10-1.61. Bike Path (Upper Attachment) / Bid Item 58	L 91385	8/31/2007	24 pcs	23	115
		Test Reports / T-NC-COC				
8	M30 x 3.5-6H hex nut per approx 28mm thick. Reference Sheet #'s 830C, 831C & 832C of 1204. Material per ASTM-A563M, cl 10; HDG per ASTM-A153; tapped oversized. Special Provisions 10-1.59, 10-1.60 & 10-1.61. Bike Path (Upper Attachment) / Bid Item 58 assembled on bolts	L 91386	8/31/2007	55 pcs	51	64
		Test Reports / T-NC-COC				
9	M30 flat washer per DIN 6916 (295-350 HV); HDG per ASTM-A153. Reference Sheet #'s 830C, 831C & 832C of 1204. Special Provisions 10-1.59, 10-1.60 & 10-1.61. Bike Path (Upper Attachment) / Bid Item 58	L 91387	8/31/2007	55 pcs	47	27
		Test Reports / T-NC-OMC				
10	M30 x 3.5-6H hex jam nut (plain finish; tapped oversized to fit HDG bolt). Reference Sheet #'s 830C, 831C & 832C of 1204. Material per ASTM-A563M, cl 10. Special Provisions 10-1.59, 10-1.60 & 10-1.61. Bike Path (Upper Attachment) / Bid Item 58	L 91388	8/31/2007	94 pcs	94	53
		Test Reports / T-NC-COC				
11	M30 flat washer per DIN 6916 (295-350 HV). Reference Sheet #'s 830C, 831C & 832C of 1204. Special Provisions 10-1.59, 10-1.60 & 10-1.61. Bike Path (Upper Attachment) / Bid Item 58	L 91389	8/31/2007	94 pcs	94	13
		Test Reports / T-NC-OMC				

STATE OF CALIFORNIA • DEPARTMENT OF TRANSPORTATION
INSPECTION RELEASE TAG
TL-0624 (REV. 10/03)

B63-077-07.
STATE LOT NO. 04-0120F4
CONTRACT NO.
P. DAWSON 11-14-07
RELEASED (*) BY DATE

FM 92 1554 * Based upon selective sampling

CERTIFIED TEST REPORT

DYSON CORP.

DIN DOMESTIC NUT

53 Freedom Road
Painesville, OH 44077

440-946-3500
440-352-2700 fax

DYSON ORDER#	CUSTOMER ORDER#	ITEM NUMBER	QUANTITY SHIPPED	DATE SHIPPED
L 91385	660110-SA-017	7 of 34	23 pcs	11/14/07

CUSTOMER
American Bridge / Fluor JV
375 Burma Road
Oakland, CA 94607

USA

DRAWING
830C thru 832C

PRODUCT DESCRIPTION
M30 x 3.5-6g x 435mm lg. hex bolt per DIN 6914 w/150mm useable thread. Ref. Sheet #'s 830C, 831C & 832C of 1204. HDG per ASTM-A123 w/near white blast. Bike Path (Upper Attachment) / Bid Item 58

SPECIFICATIONS
ASTM-A354-04 Grade BD with special provisions 10-1.59, 10-1.60, 10-1.61 std specifications 75-1.05

STARTING MATERIAL	DIA	GRADE	QTY	LOT CODE	HEAT NO.	ORIGINAL MILL
Round Bar	1.187	4140	23	LNX6	704380	Alton Steel

The product listed above was manufactured, tested, sampled, and inspected in accordance with the specification, purchase order, and any supplementary requirements and was found to meet those requirements unless otherwise noted.

1. The steel was melted and manufactured in the USA and the product was manufactured and tested in the USA.
2. Heat treat data: Austenitized at 1580 deg. F. for 2-1/2 hours and oil quenched and tempered at 1050 deg. F. for 2-1/2 hours and air cooled.
3. Hardness Results (3 samples): 341 HBW, 341 HBW, 341 HBW
4. These ASTM-A354-04 Grade BD fasteners conform to the provisions of ASTM-A143.

Attachments:
Mill Test Report
Mechanical Test Report
Galvanizing Certification
Embrittlement Test Report

Deborah A. Smith
Q.A. Admin. Assistant
11/14/07

CERTIFIED MILL TEST REPORT

ASI ALTON STEEL INC

Alton Steel Test Lab
#5 Cut Street
Alton, IL. 62002-9011
(618) 463-4490 EXT 2486
(618) 463-4491 (Fax)

CODE LNX6

BILL TO
The Dyson Corporation
53 Freedom Road
Painesville, OH 44077

SHIP TO
The Dyson Corporation
53 Freedom Road
Painesville, OH 44077

Date	05/17/2007	Customer PO	53622-1	Specifications
ASI Ord No.	16173	Customer PT.		SAE 4140
ASI Ord Line Item	1			

Item Description
Steel Bar, Hot Rolled, 1.1870, 20' 0 "

Heat Number Strand Cast, RR = 44.28:1

Yield PSI	Tensile PSI	% Elongation	% ROA	Bend Test

CHEMICAL ANALYSIS TEST METHODS ASTM E-415 & E-1019

Heat Number	C	Mn	P	S	Si	Cu	Ni	Cr	Mo	Sn	Al	Nb/Cb	V	B	Ti	N	Ca
704380	0.42	0.81	0.015	0.026	0.28	0.26	0.090	0.936	0.164	0.015	0.003	0.027	0.005	0.0002	0.0024	0.0099	0.0014

JOMINY HARDENABILITY USING ASTM A-255 CALCULATED FROM CHEMICAL DI

Heat Number	GS	DI
704380	8	5.01

SPECIAL TEST RESULTS

ADDITIONAL COMMENTS

No mercury, lead, radium, of alpha containing material or equipment is used or deliberately added in the production of this steel. No weld or weld repairs were performed on this material. This Steel is 100% Electric Arc Furnace Melted and Rolled in the U.S.A.

Alteration or reproduction of this report, except in full, is not allowed without written approval by a representative of Alton Steel Incorporated.

Subscribed and sworn to before me, a Notary Public, in and for the county of Madison, State of Illinois

this _____ Day of _____

My commission expires_____

(Notary Public)

I hereby certify that the above tests are correct as contained in the records of ALTON STEEL INCORPORATED

Quality Leader: Rubert Cauley

R Cauley

Q.A. REVIEWED
DATE 6/1/07
DYSON

LNX

STORK
Materials Technology

Stork Herron Testing Laboratories

9/19/2007

Material Testing and Non-Destructive Testing

Debbie Smith
Dyson Corp
53 Freedom Rd
Painesville, OH 44077-1232

5405 E. Schaaf Road
Cleveland, OH 44131
USA

Telephone : (216) 524-1450
Fax : (216) 524-1459
Website : www.storkherron.com

Date Received: 9/17/2007

Test Report No.: DYS006-07-09-45167-1

TEST REPORT

P.O. No.: 56047

Sample Description: One (1) M30 X 3.5-6g X 435mm Hex Bolt, Heat#: 704380, Heat Code: LNX6, Job # L91385, Customer PO# 660110-SA-017, Spec. ASTM A354, Grade BD

MECHANICAL TESTING PER ASTM F606-06, ASTM A370-06

	Full Size Yield .2% offset		Ultimate Strength with a 10° Wedge	
	(Lbs.)	(psi)	(Lbs.)	(psi)
Results:	136000	156000	142800	164000
Required:	-	130000 Min.	82050 Min.	-

The sample fractured in the threads.

CONFORMANCE

Sample test data is in conformance with customer requirements listed above.

QUALITY ASSURANCE STATEMENT

The above services were performed in accordance with Herron Testing Laboratories' Quality Assurance Program Edition #1, Revision 2 dated 1/30/07 as audited and approved by Dyson Corporation on 3/12/07.
This material was not contaminated by mercury or chlorinated solvents during the handling and processing at Stork-Herron Testing Laboratories facilities.

The reported results represent the actual attributes of the material tested and indicate full compliance with all applicable specification and contract requirements.

The above services were performed in accordance with Herron Testing Laboratories' Quality Assurance Program Edition 1, Revision 2 dated 1/30/07. Information and statements in this report are derived from material, information and/or specifications furnished by the client and exclude any expressed or implied warranties as to the fitness of the material tested or analyzed for any particular purpose or use. This report is the confidential property of our client and may not be used for advertising purposes. This report shall not be reproduced except in full, without written approval of this laboratory. The recording of false, fictitious or fraudulent statements or entries on this document may be punished as a felony under Federal Statutes including Federal Law Title 18, Chapter 47.
Sample remnants are held for a minimum of 30 days following issuance of test results, at which point they will be discarded unless notified in writing by the client. This material was not contaminated by mercury or chlorinated solvents during the handling and processing at Stork-Herron Testing Laboratories facilities.

Michael R. Gaydos
General Manager, COO

56047

DATE 9/19/2007

THE ART GALVANIZING WKS., INC.

3935 VALLEY ROAD-CLEVELAND,OHIO 44109 PHONE 216-749-0020

PACKING SLIP/CERTIFICATIONS

TO DYSON CORP PO# 56064

NOTE: THE FOLLOWING MATERIAL HAS BEEN HOT DIP GALVANIZED TO ASTM-A 153 OR ASTM-A 123 (LATEST REVISION) SPECIFICATIONS AS APPLICABLE. A COPY OF THE ABOVE PURCHASE ORDER IS AN INTEGRAL PART OF THIS CERTIFICATION AND SHOULD BE ATTACHED.

S/O L91385
M30-3.5-6GX435MM HEX BOLT
26PCS
GALV WEIGHT 151#

INCHES	OZ/SQ FT
0.0064	3.76
0.007	4.12
0.0072	4.24
0.0074	4.35
0.0078	4.59
AVG	4.21

S/O L91396
M30-3.5-6GX460MM HEX BOLT
19PCS
GALV WEIGHT 124#

INCHES	OZ/SQ FT
0.0058	3.41
0.006	3.53
0.0066	3.88
0.007	4.12
0.0072	4.24
AVG	3.84

S/O L91397
M30-3.5-6GX420MM HEX BOLT
6PCS
GALV WEIGHT 34#

INCHES	OZ/SQ FT
0.006	3.53
0.0062	3.65
0.0064	3.76
0.0068	4.00
0.007	4.12
AVG	3.81

S/O L91398
M30-3.5-6GX560MM HHB
7PCS
GALV WEIGHT 51#

INCHES	OZ/SQ FT
0.0044	2.59
0.006	3.53
0.0062	3.65
0.0064	3.76
0.0066	3.88
AVG	3.48

S/O L91404
M24-3-6GX300MM HX BOLT
56PCS
GALV WEIGHT 165#

INCHES	OZ/SQ FT
0.006	3.53
0.0062	3.65
0.0064	3.76
0.0066	3.88
0.0068	4.00
AVG	3.76

S/O L91409
M24-3-6GX480MM HB
20PCS
GALV WEIGHT 92#

INCHES	OZ/SQ FT
0.0054	3.18
0.0058	3.41
0.006	3.53
0.0064	3.76
0.007	4.12
AVG	3.60

GALV WEIGHT

INCHES	OZ/SQ FT
0	0.00
0	0.00
0	0.00
0	0.00
0	0.00
AVG	0.00

GALV WEIGHT

INCHES	OZ/SQ FT
0	0.00
0	0.00
0	0.00
0	0.00
0	0.00
AVG	0.00

GALV WEIGHT

INCHES	OZ/SQ FT
0	0.00
0	0.00
0	0.00
0	0.00
0	0.00
AVG	0.00

Pat mahoney

STORK
Materials Technology

Stork Herron Testing Laboratories

10/1/2007

Material Testing and Non-Destructive Testing

Debbie Smith
Dyson Corp
53 Freedom Rd
Painesville, OH 44077-1232

5405 E. Schaaf Road
Cleveland, OH 44131
USA

Date Received: 9/24/2007

Telephone : (216) 524-1450
Fax : (216) 524-1459
Website : www.storkherron.com

Test Report No.: DYS006-07-09-45658-1

TEST REPORT

P.O. No.: 56150

Sample Description: One (1) M30 X 3.5-6G X 435MM Hex Bolt, Heat #: 704380, Heat Code: LNX6, LNX7, LNX8, LNX9, Material per ASTM A354, Grade BD, Job # L91385,L91396,L91397,L91398, Customer PO# 660110-SA-017

MECHANICAL TESTING PER ASTM F606

Hydrogen Embrittlement Test 4° Wedge Torque Method	
48 Hours	964 Ft. Lbs.
1	Visually Satisfactory

QUALITY ASSURANCE STATEMENT

The above services were performed in accordance with Herron Testing Laboratories' Quality Assurance Program Edition #1, Revision 2 dated 1/30/07 as audited and approved by Dyson Corporation on 3/12/07.

This material was not contaminated by mercury or chlorinated solvents during the handling and processing at Stork-Herron Testing Laboratories facilities.

The reported results represent the actual attributes of the material tested and indicate full compliance with all applicable specification and contract requirements.

The above services were performed in accordance with Herron Testing Laboratories' Quality Assurance Program Edition 1, Revision 2 dated 1/30/07. Information and statements in this report are derived from material, information and/or specifications furnished by the client and exclude any expressed or implied warranties as to the fitness of the material tested or analyzed for any particular purpose or use. This report is the confidential property of our client and may not be used for advertising purposes. This report shall not be reproduced except in full, without written approval of this laboratory. The recording of false, fictitious or fraudulent statements or entries on this document may be punished as a felony under Federal Statutes including Federal Law Title 18, Chapter 47.
Sample remnants are held for a minimum of 30 days following issuance of test results, at which point they will be discarded unless notified in writing by the client. This material was not contaminated by mercury or chlorinated solvents during the handling and processing at Stork-Herron Testing Laboratories facilities.

Michael R. Gaydos
General Manager, COO

56150

CERTIFIED TEST REPORT

DYSON CORP.

DN DOMESTIC NUT

53 Freedom Road
Painesville, OH 44077

440-946-3500
440-352-2700 fax

DYSON ORDER#	CUSTOMER ORDER#	ITEM NUMBER	QUANTITY SHIPPED	DATE SHIPPED
L 91396	660110-SA-017	18 of 34	19 pcs	11/14/07

CUSTOMER
American Bridge / Fluor JV
375 Burma Road
Oakland, CA 94607

USA

DRAWING
830C

PRODUCT DESCRIPTION
M30 x 3.5-6g x 460mm lg. hex bolt per DIN 6914 w/150mm useable thread. Reference Sheet # 830C of 1204. HDG per ASTM-A123 w/near white blast. Bike Path (Lower Attachment) / Bid Item 58

SPECIFICATIONS
ASTM-A354-04 Grade BD with special provisions 10-1.59, 10-1.60, 10-1.61 std specifications 75-1.05

STARTING MATERIAL	DIA	GRADE	QTY	LOT CODE	HEAT NO.	ORIGINAL MILL
Round Bar	1.187	4140	19	LNX7	704380	Alton Steel

The product listed above was manufactured, tested, sampled, and inspected in accordance with the specification, purchase order, and any supplementary requirements and was found to meet those requirements unless otherwise noted.

1. The steel was melted and manufactured in the USA and the product was manufactured and tested in the USA.
2. Heat treat data: Austenitized at 1580 deg. F. for 2-1/2 hours and oil quenched and tempered at 1050 deg. F. for 2-1/2 hours and air cooled.
3. Hardness Results (3 samples): 341 HBW, 341 HBW, 341 HBW
4. These ASTM-A354-04 Grade BD fasteners conform to the provisions of ASTM-A143.

Attachments:
Mill Test Report
Mechanical Test Report
Galvanizing Certification
Embrittlement Test Report

Deborah A. Smith
Q.A. Admin. Assistant
11/14/07

CERTIFIED MILL TEST REPORT

ASI ALTON STEEL INC

Alton Steel Test Lab
#5 Cut Street
Alton, IL. 62002-9011
(618) 463-4490 EXT 2486
(618) 463-4491 (Fax)

CODE LNX7

BILL TO

The Dyson Corporation
53 Freedom Road
Painesville, OH 44077

SHIP TO

The Dyson Corporation
53 Freedom Road
Painesville, OH 44077

Date	05/17/2007	Customer PO	53622-1	Specifications
ASI Ord No.	16173	Customer PT.		SAE 4140
ASI Ord Line Item	1			

Item Description
Steel Bar, Hot Rolled, 1.1870, 20' 0 "

Heat Number Strand Cast, RR = 44.28:1

Heat Number	Yield PSI	Tensile PSI	% Elongation	% ROA	Bend Test
704380					

CHEMICAL ANALYSIS TEST METHODS ASTM E-415 & E-1019

Heat Number	C	Mn	P	S	Si	Cu	Ni	Cr	Mo	Sn	Al	Nb/Cb	V	B	Ti	N	Ca
704380	0.42	0.81	0.015	0.026	0.28	0.26	0.090	0.936	0.164	0.015	0.003	0.027	0.005	0.0002	0.0024	0.0099	0.0014

JOMINY HARDENABILITY USING ASTM A-255 CALCULATED FROM CHEMICAL DI

Heat Number	GS	DI
704380	8	5.01

SPECIAL TEST RESULTS

ADDITIONAL COMMENTS

No mercury, lead, radium, of alpha containing material or equipment is used or deliberately added in the production of this steel. No weld or weld repairs were performed on this material. This Steel is 100% Electric Arc Furnace Melted and Rolled in the U.S.A.

Alteration or reproduction of this report, except in full, is not allowed without written approval by a representative of Alton Steel Incorporated.

Subscribed and sworn to before me, a Notary Public, in and for the county of Madison, State of Illinois

this _____ Day of _____

My commission expires _____

(Notary Public)

I hereby certify that the above tests are correct as contained in the records of ALTON STEEL INCORPORATED

Quality Leader: Rubert Cauley

R Cauley

Q.A. REVIEWED
DATE 6/1/07
DYSON

LNX

STORK
Materials Technology

Stork Herron Testing Laboratories

9/19/2007

Material Testing and Non-Destructive Testing

Debbie Smith
Dyson Corp
53 Freedom Rd
Painesville, OH 44077-1232

5405 E. Schaaf Road
Cleveland, OH 44131
USA

Telephone : (216) 524-1450
Fax : (216) 524-1459
Website : www.storkherron.com

Date Received: 9/17/2007

Test Report No.: DYS006-07-09-45166-1

TEST REPORT

P.O. No.: 56046

Sample Description: One (1) M30 X 3.5-6g X 460mm Hex Bolt, Heat #: 704380, Heat Code: LNX7, Job # L91396, Customer PO# 660110-SA-017, Spec. ASTM A354, Grade BD

MECHANICAL TESTING PER ASTM F606-06, ASTM A370-06

	Full Size Yield .2% offset		Ultimate Strength with a 6° Wedge	
	(Lbs.)	(psi)	(Lbs.)	(psi)
Results:	130000	150000	139100	160000
Required:	-	130000 Min.	130500 Min.	-

The sample fractured in the threads.

CONFORMANCE

Sample test data is in conformance with customer requirements listed above.

QUALITY ASSURANCE STATEMENT

The above services were performed in accordance with Herron Testing Laboratories' Quality Assurance Program Edition #1, Revision 2 dated 1/30/07 as audited and approved by Dyson Corporation on 3/12/07.
This material was not contaminated by mercury or chlorinated solvents during the handling and processing at Stork-Herron Testing Laboratories facilities.

The reported results represent the actual attributes of the material tested and indicate full compliance with all applicable specification and contract requirements.

The above services were performed in accordance with Herron Testing Laboratories' Quality Assurance Program Edition 1, Revision 2 dated 1/30/07. Information and statements in this report are derived from material, information and/or specifications furnished by the client and exclude any expressed or implied warranties as to the fitness of the material tested or analyzed for any particular purpose or use. This report is the confidential property of our client and may not be used for advertising purposes. This report shall not be reproduced except in full, without written approval of this laboratory. The recording of false, fictitious or fraudulent statements or entries on this document may be punished as a felony under Federal Statutes including Federal Law Title 18, Chapter 47.
Sample remnants are held for a minimum of 30 days following issuance of test results, at which point they will be discarded unless notified in writing by the client. This material was not contaminated by mercury or chlorinated solvents during the handling and processing at Stork-Herron Testing Laboratories facilities.

Michael R. Gaydos
General Manager, COO

56046

DATE 9/19/2007

THE ART GALVANIZING WKS., INC.

3935 VALLEY ROAD-CLEVELAND,OHIO 44109 PHONE 216-749-0020

PACKING SLIP/CERTIFICATIONS

TO DYSON CORP PO# 56064

NOTE: THE FOLLOWING MATERIAL HAS BEEN HOT DIP GALVANIZED TO ASTM-A 153 OR ASTM-A 123 (LATEST REVISION) SPECIFICATIONS AS APPLICABLE. A COPY OF THE ABOVE PURCHASE ORDER IS AN INTEGRAL PART OF THIS CERTIFICATION AND SHOULD BE ATTACHED.

S/O. L91385
M30-3.5-6GX435MM HEX BOLT
26PCS
GALV WEIGHT 151#

INCHES	OZ/SQ FT
0.0064	3.76
0.007	4.12
0.0072	4.24
0.0074	4.35
0.0078	4.59
AVG	4.21

S/O L91396
M30-3.5-6GX460MM HEX BOLT
19PCS
GALV WEIGHT 124#

INCHES	OZ/SQ FT
0.0058	3.41
0.006	3.53
0.0066	3.88
0.007	4.12
0.0072	4.24
AVG	3.84

S/O L91397
M30-3.5-6GX420MM HEX BOLT
6PCS
GALV WEIGHT 34#

INCHES	OZ/SQ FT
0.006	3.53
0.0062	3.65
0.0064	3.76
0.0068	4.00
0.007	4.12
AVG	3.81

S/O L91398
M30-3.5-6GX560MM HHB
7PCS
GALV WEIGHT 51#

INCHES	OZ/SQ FT
0.0044	2.59
0.006	3.53
0.0062	3.65
0.0064	3.76
0.0066	3.88
AVG	3.48

S/O L91404
M24-3-6GX300MM HX BOLT
56PCS
GALV WEIGHT 165#

INCHES	OZ/SQ FT
0.006	3.53
0.0062	3.65
0.0064	3.76
0.0066	3.88
0.0068	4.00
AVG	3.76

S/O L91409
M24-3-6GX480MM HB
20PCS
GALV WEIGHT 92#

INCHES	OZ/SQ FT
0.0054	3.18
0.0058	3.41
0.006	3.53
0.0064	3.76
0.007	4.12
AVG	3.60

GALV WEIGHT

INCHES	OZ/SQ FT
0	0.00
0	0.00
0	0.00
0	0.00
0	0.00
AVG	0.00

GALV WEIGHT

INCHES	OZ/SQ FT
0	0.00
0	0.00
0	0.00
0	0.00
0	0.00
AVG	0.00

GALV WEIGHT

INCHES	OZ/SQ FT
0	0.00
0	0.00
0	0.00
0	0.00
0	0.00
AVG	0.00

Pat mahoney

STORK
Materials Technology

Stork Herron Testing Laboratories

10/1/2007

Debbie Smith
Dyson Corp
53 Freedom Rd
Painesville, OH 44077-1232

Date Received: 9/24/2007

Test Report No.: DYS006-07-09-45658-1

P.O. No.: 56150

Material Testing and Non-Destructive Testing

5405 E. Schaaf Road
Cleveland, OH 44131
USA

Telephone : (216) 524-1450
Fax : (216) 524-1459
Website : www.storkherron.com

TEST REPORT

Sample Description: One (1) M30 X 3.5-6G X 435MM Hex Bolt, Heat #: 704380, Heat Code: LNX6, LNX7, LNX8, LNX9, Material per ASTM A354, Grade BD, Job # L91385,L91396,L91397,L91398, Customer PO# 660110-SA-017

MECHANICAL TESTING PER ASTM F606

Hydrogen Embrittlement Test 4° Wedge Torque Method	
48 Hours	964 Ft. Lbs.
1	Visually Satisfactory

QUALITY ASSURANCE STATEMENT

The above services were performed in accordance with Herron Testing Laboratories' Quality Assurance Program Edition #1, Revision 2 dated 1/30/07 as audited and approved by Dyson Corporation on 3/12/07.

This material was not contaminated by mercury or chlorinated solvents during the handling and processing at Stork-Herron Testing Laboratories facilities.

The reported results represent the actual attributes of the material tested and indicate full compliance with all applicable specification and contract requirements.

The above services were performed in accordance with Herron Testing Laboratories' Quality Assurance Program Edition 1, Revision 2 dated 1/30/07. Information and statements in this report are derived from material, information and/or specifications furnished by the client and exclude any expressed or implied warranties as to the fitness of the material tested or analyzed for any particular purpose or use. This report is the confidential property of our client and may not be used for advertising purposes. This report shall not be reproduced except in full, without written approval of this laboratory. The recording of false, fictitious or fraudulent statements or entries on this document may be punished as a felony under Federal Statutes including Federal Law Title 18, Chapter 47.
Sample remnants are held for a minimum of 30 days following issuance of test results, at which point they will be discarded unless notified in writing by the client. This material was not contaminated by mercury or chlorinated solvents during the handling and processing at Stork-Herron Testing Laboratories facilities.

Michael R. Gaydos
General Manager, COO

56150

6/3

CERTIFIED MATERIAL TEST REPORT

09-0481

DYSON CORP.

DN DOMESTIC NUT

53 Freedom Road
Painesville, OH 44077

440-946-3500
440-352-2700 fax

DYSON ORDER#	*CUSTOMER ORDER#*	*ITEM NUMBER*	*QUANTITY SHIPPED*	*DATE SHIPPED*
L 101178	**660110-SA-017 C/O 011**	**1 of 4**	**pcs**	

CUSTOMER
American Bridge / Fluor JV
375 Burma Road
Oakland, CA 94607

USA

DRAWING
Dyson Std

PRODUCT DESCRIPTION
M30 x 3.5-6g x 460mm lg. hex bolt per DIN 6914 w/150mm useable thread, HDG per ASTM-A153 w/near white blast (no pickling)

SPECIFICATIONS
ASTM-A354-04 Grade BD with special 10-1.59, 10-1.60, 10-1.61 std specifications
****TL-38 submittal req'd per routing****

STARTING MATERIAL	*DIA*	*GRADE*	*QTY*	*LOT CODE*	*HEAT NO.*	*ORIGINAL MILL*
Round Bar	**1.187**	**4140**	**6**	**LNX14**	**704380**	**Alton Steel**

The product listed above was manufactured, tested, sampled, and inspected in accordance with the specification, purchase order, and any supplementary requirements and was found to meet those requirements unless otherwise noted.

1. The steel was melted and manufactured in the USA and the product was manufactured and tested in the USA.
2. Hardness Results:

Attachments:
Mill Test Report
Heat Treat Certification
Mechanical Test Report
Galvanizing Certification
Embrittlement Test Report

Deborah A. Smith
Q.A. Admin. Assistant

CERTIFIED MILL TEST REPORT

ASI ALTON STEEL INC

Alton Steel Test Lab
#5 Cut Street
Alton, IL. 62002-9011
(618) 463-4490 EXT 2486
(618) 463-4491 (Fax)

CODE LNX14

BILL TO
The Dyson Corporation
53 Freedom Road
Painesville, OH 44077

SHIP TO
The Dyson Corporation
53 Freedom Road
Painesville, OH 44077

Date	05/17/2007	Customer PO	53622-1	**Specifications**
ASI Ord No.	16173	Customer PT.		SAE 4140
ASI Ord Line Item	1			

Item Description
Steel Bar, Hot Rolled, 1.1870, 20' 0 "

Strand Cast, RR = 44.28:1

Heat Number | **Yield PSI** | **Tensile PSI** | **% Elongation** | **% ROA** | **Bend Test**

CHEMICAL ANALYSIS TEST METHODS ASTM E-415 & E-1019

Heat Number	C	Mn	P	S	Si	Cu	Ni	Cr	Mo	Sn	Al	Nb/Cb	V	B	Ti	N	Ca
704380	0.42	0.81	0.015	0.026	0.28	0.26	0.090	0.936	0.164	0.015	0.003	0.027	0.005	0.0002	0.0024	0.0099	0.0014

JOMINY HARDENABILITY USING ASTM A-255 CALCULATED FROM CHEMICAL DI

Heat Number	GS	DI
704380	8	5.01

SPECIAL TEST RESULTS

ADDITIONAL COMMENTS

No mercury, lead, radium, of alpha containing material or equipment is used or deliberately added in the production of this steel. No weld or weld repairs were performed on this material. This Steel is 100% Electric Arc Furnace Melted and Rolled in the U.S.A.

Alteration or reproduction of this report, except in full, is not allowed without written approval by a representative of Alton Steel Incorporated.

I hereby certify that the above tests are correct as contained in the records of ALTON STEEL INCORPORATED

Quality Leader: Rubert Cauley

R Cauley

Subscribed and sworn to before me, a Notary Public, in and for the county of Madison, State of Illinois

this _____ Day of _____

My commission expires_____

(Notary Public)

Q.A. REVIEWED
DATE 6/1/07
DYSON

LNX

CERTIFICATION FORM

MODERN INDUSTRIES, INC. - HEAT TREATING DIVISION

PHONE 814/455-8061 - 814/455-8065 after 5 P.M. and Weekends FAX # 814/453-4382 613 WEST 11TH STREET, P.O. BOX 399, ERIE, PA 16512

CUST Dyson Corporation
PART # A354 GRBD
P.O. # 65357
MATERIAL 4140
SPEC CORE HARDNESS .
SPEC SURFACE HARDNESS 35/37 HRC
SPECIFIED CASE DEPTH .
PROCESS ID # 30340
ORDER QUANTITY 11
QUANTITY APPROVED 11
QUANTITY CHECKED 3
OF READING PER PIECE 2
OF CONTAINERS 1
VISUAL INSPEC Inspection Dept
CUST SPEC: 1.11-2 REV 2
CUST SPEC: 800/1100 TEMPER
MILITARY: 10-1.59, 10-1.60
MILITARY: 10-1.61, 75-1.05
SCALE TYPE HRC

DESCRIPTION
INSPECTOR 431 04/05/09 08:07

INSPECTION RESULTS

PC#	RESULT	PC#	RESULT	PC#	RESULT

OF READING 6
LO SURF HARDNESS 35.1
HI SURF HARDNESS 36.4
RANGE 1.3
STANDARD DEVIATION
AVERAGE 35.75
ACTUAL CASE DEPTH
ACTUAL CORE HARDNESS

HEAT CYCLE	TEMPERATURE	TIME	QUENCH MEDIA	COMMENTS
AUSTENITIZE	1550 DEGF	2.00	OIL	
TEMPER	1025 DEGF	2.00	AIR	

HEAT TREAT PER DQP 1.11-2 REV 02, SOP
SA354/A354 GR BD.

The recording of false, fictitious or fradulent statements or entries on this document may be punishable as a felony under Federal Statute.

There are no known mercury compounds in our plant which could come in contact with these parts.

I, hereby certify that the above listed part number has been processed and inspected and the results are in accordance with your above listed specification as instructed in your purchase order referenced above.

NAME Jeffrey M Szczesny TITLE Dep DATE 4/5/09

I 101178

A DIVISION OF J.T. ADAMS CO., INC.
4520 WILLOW PARKWAY
CLEVELAND, OHIO 44125
PHONE (216) 641-3290
FAX (216) 641-1223
www.tensile.com

TTML TENSILE TESTING METALLURGICAL LABORATORY

CERTIFIED TEST REPORT

Dyson Corporation
53 Freedom Road
Painesville OH 44077

Job No.: A9-111-490
Date: 4-23-09
Cust. PO#: 65795

Description: 2 samples 1-3/16" Dia. (Represents M30 Hex Bolt)
SO# L101178 & L101180 Cust PO# 660110-SA-017 C/O 011
Code# LNX14 & LNX15

Material: AISI 4140 Heat# 704380

Spec: ASTM A354-07a Gr. BD

TEST RESULTS

Code#	Tensile, ksi	Yield, .2% ksi	Elong., % in 4D	Red. of Area, %
Requirements (Min.):	150	130	14	40
LNX14	176	165	15	52
LNX15	168	156	15	52

Test Method: ASTM A370-08b

The above **conforms** to specifications listed.

This material tested in accordance with the Tensile Testing's Quality System Manual dated 2/15/07 Rev. D as audited and approved by Dyson. The reported results represent the actual attributes of the material tested and indicate full compliance with all applicable specification and contract requirements. We certify that the foregoing is a true copy of the data resulting from tests performed in the laboratory.

Authorized Signature

Timothy J. Adams, President

ACCREDITED
Cert No. 0161

This Report May Not Be Reproduced Except In Full
This report represents Tensile Testing interpretation of the results obtained from the test and is not to be construed as a Guaranty or Warranty of the condition of the materials tested. Tensile Testing shall not be held liable for misinterpretation of conditions, loss, damage, injury or death arising from or attributable to delay preceding a test or subsequent to performance of a test.

STORK
Materials Technology

Stork Herron Testing Laboratories

4/27/2009

Debbie Smith
Dyson Corp
53 Freedom Rd
Painesville, OH 44077-1232

Date Received: 4/24/2009

Test Report No.: DYS006-09-04-80973-1

Material Testing and Non-Destructive Testing

5405 E. Schaaf Road
Cleveland, OH 44131
USA

Telephone : (216) 524-1450
Fax : (216) 524-1459
Website : www.storkherron.com

TEST REPORT

P.O. No.: 65879

Sample Description: One (1) M30 x 3.5-6g x 460mm Hex Bolt.: Material: ASTM A354, Grade BD, Job # L101178, Customer PO# 660110-SA-017 C/O 011, Heat #/Heat Code 704380/ LNX14

MECHANICAL TESTING PER ASTM F606-07, ASTM A370-08b

	Full Size Yield .2% offset		Ultimate Strength with a 6° Wedge	
	(Lbs.)	(ksi)	(Lbs.)	(ksi)
Results:	148600	171	148900	171
Required:	113042 Min.	130 Min.	130500 Min.	150 Min.

The sample fractured in the threads.

CONFORMANCE

Sample test data is in conformance with customer requirements listed above.

QUALITY ASSURANCE STATEMENT

The above services were performed in accordance with Herron Testing Laboratories' Quality Assurance Program Edition #1, Revision 2 dated 1/30/07 as audited and approved by Dyson Corporation on 3/12/07.
This material was not contaminated by mercury or chlorinated solvents during the handling and processing at Stork-Herron Testing Laboratories facilities.

The reported results represent the actual attributes of the material tested and indicate full compliance with all applicable specification and contract requirements.

EXPORT CONTROLLED (ITAR)

THE TECHNICAL DATA AND / OR MATERIALS ASSOCIATED WITH THIS ORDER FALLS WITHIN THE DEFINITION OF THE INTERNATIONAL TRAFFIC IN ARMS REGULATIONS (ITAR) AND IS SUBJECT TO THE EXPORT CONTROL LAWS OF THE U.S. GOVERNMENT. TRANSFER OF THIS DATA BY ANY MEANS TO A FOREIGN PERSON OR FOREIGN ENTITY, WHETHER IN THE UNITED STATES OR ABROAD, WITHOUT AN EXPORT LICENSE, ITAR EXEMPTION OR OTHER APPROVAL FROM THE U.S. DEPARTMENT OF STATE, IS PROHIBITED.

The above services were performed in accordance with Herron Testing Laboratories' Quality Assurance Program Edition 1, Revision 2 dated 1/30/07. Information and statements in this report are derived from material, information and/or specifications furnished by the client and exclude any expressed or implied warranties as to the fitness of the material tested or analyzed for any particular purpose or use. This report is the confidential property of our client and may not be used for advertising purposes. This report shall not be reproduced except in full, without written approval of this laboratory. The recording of false, fictitious or fraudulent statements or entries on this document may be punished as a felony under Federal Statutes.
Sample remnants are held for a minimum of 30 days following issuance of test results, at which point they will be discarded unless notified in writing by the client. This material was not contaminated by mercury or chlorinated solvents during the handling and processing at Stork-Herron Testing Laboratories facilities.

Paula Tesar

Paula Tesar
Quality Administrator

65879

STORK
Materials Technology

Stork Herron Testing Laboratories

5/18/2009

Debbie Smith
Dyson Corp
53 Freedom Rd
Painesville, OH 44077-1232

Date Received: 5/12/2009

Test Report No.: DYS006-09-05-81926-1

Material Testing and Non-Destructive Testing

5405 E. Schaaf Road
Cleveland, OH 44131
USA

Telephone : (216) 524-1450
Fax : (216) 524-1459
Website : www.storkherron.com

TEST REPORT

P.O. No.: 66148

Sample Description: One (1) M30 X 3.5-6g X 460mm Hex Bolt, Per DIN 6914 w/150mm useable thread, Material per ASTM A354, Grade BD, HDG per ASTM-A153, per ASTM F606, Job# L101178, L101180, Cusomert PO # 660110-SA-017 C/O 011, Heat #/Code 704380/LNX14

MECHANICAL TESTING PER ASTM F606-08

Hydrogen Embrittlement Test 4° Wedge Torque Method	
48 Hours	395 Ft. Lbs.
Result	Visually Satisfactory

QUALITY ASSURANCE STATEMENT

The above services were performed in accordance with Herron Testing Laboratories' Quality Assurance Program Edition #1, Revision 2 dated 1/30/07 as audited and approved by Dyson Corporation on 3/12/07.

The reported results represent the actual attributes of the material tested and indicate full compliance with all applicable specification and contract requirements.

EXPORT CONTROLLED (ITAR)

THE TECHNICAL DATA AND / OR MATERIALS ASSOCIATED WITH THIS ORDER FALLS WITHIN THE DEFINITION OF THE INTERNATIONAL TRAFFIC IN ARMS REGULATIONS (ITAR) AND IS SUBJECT TO THE EXPORT CONTROL LAWS OF THE U.S. GOVERNMENT. TRANSFER OF THIS DATA BY ANY MEANS TO A FOREIGN PERSON OR FOREIGN ENTITY, WHETHER IN THE UNITED STATES OR ABROAD, WITHOUT AN EXPORT LICENSE, ITAR EXEMPTION OR OTHER APPROVAL FROM THE U.S. DEPARTMENT OF STATE, IS PROHIBITED.

The above services were performed in accordance with Herron Testing Laboratories' Quality Assurance Program Edition 1, Revision 2 dated 1/30/07. Information and statements in this report are derived from material, information and/or specifications furnished by the client and exclude any expressed or implied warranties as to the fitness of the material tested or analyzed for any particular purpose or use. This report is the confidential property of our client and may not be used for advertising purposes. This report shall not be reproduced except in full, without written approval of this laboratory. The recording of false, fictitious or fraudulent statements or entries on this document may be punished as a felony under Federal Statutes.
Sample remnants are held for a minimum of 30 days following issuance of test results, at which point they will be discarded unless notified in writing by the client. This material was not contaminated by mercury or chlorinated solvents during the handling and processing at Stork-Herron Testing Laboratories facilities.

Paula Tesar

Paula Tesar
Quality Administrator

66148

DATE 5/7/2009

THE ART GALVANIZING WKS., INC.

3935 VALLEY ROAD-CLEVELAND,OHIO 44109 PHONE 216-749-0020

PACKING SLIP/CERTIFICATIONS

TO DYSON CORP PO# 66018

NOTE: THE FOLLOWING MATERIAL HAS BEEN HOT DIP GALVANIZED TO ASTM A 153 OR ASTM A 123 (LATEST REVISION) SPECIFICATION AS APPLICABLE. A COPY OF OF THE ABOVE PURCHASE ORDER IS AN INTERRAL PART OF THIS CERTIFICATION AND SHOULD BE ATTACHED.

3.5 X 600MM ANCHOR ROD

GALV WEIGHT		543
INCHES	OZ/SQ FT	
0.0042	2.47	
0.0044	2.59	
0.0046	2.71	
0.004	2.35	
0.0038	2.24	
AVG	2.47	

3.5 HHN

GALV WEIGHT		179
INCHES	OZ/SQ FT	
0.003	1.76	
0.0032	1.88	
0.0036	2.12	
0.004	2.35	
0.0042	2.47	
AVG	2.12	

3.5"ID WASHER

GALV WEIGHT		16
INCHES	OZ/SQ FT	
0.0042	2.47	
0.0044	2.59	
0.0046	2.71	
0.0038	2.24	
0.004	2.35	
AVG	2.47	

7 X 140MM COUP NUT

GALV WEIGHT		362
INCHES	OZ/SQ FT	
0.0044	2.59	
0.0042	2.47	
0.004	2.35	
0.0038	2.24	
0.0036	2.12	
AVG	2.35	

M30 X 460MM BOLT

GALV WEIGHT		56
INCHES	OZ/SQ FT	
0.0028	1.65	
0.003	1.76	
0.0032	1.88	
0.0034	2.00	
0.0028	1.65	
AVG	1.79	

M30 X 460MM BOLT

LNX 14

GALV WEIGHT		49
INCHES	OZ/SQ FT	
0.0034	2.00	
0.0036	2.12	
0.0038	2.24	
0.0032	1.88	
0.003	1.76	
AVG	2.00	

M30 HEX NUT

GALV WEIGHT		18
INCHES	OZ/SQ FT	
0.0032	1.88	
0.0036	2.12	
0.0038	2.24	
0.004	2.35	
0.0042	2.47	
AVG	2.21	

GALV WEIGHT	
INCHES	OZ/SQ FT
0	0.00
0	0.00
0	0.00
0	0.00
0	0.00
AVG	0.00

GALV WEIGHT	
INCHES	OZ/SQ FT
0	0.00
0	0.00
0	0.00
0	0.00
0	0.00
AVG	0.00

Adrienne Klein

6/2

CERTIFIED MATERIAL TEST REPORT

09-0482

DYSON CORP.
DN DOMESTIC NUT
53 Freedom Road
Painesville, OH 44077
440-946-3500
440-352-2700 fax

DYSON ORDER#	CUSTOMER ORDER#	ITEM NUMBER	QUANTITY SHIPPED	DATE SHIPPED
L 101180	660110-SA-017 C/O 011	2 of 4	pcs	

CUSTOMER
American Bridge / Fluor JV
375 Burma Road
Oakland, CA 94607

USA

DRAWING
Dyson Std

PRODUCT DESCRIPTION
M30 x 3.5-6g x 460mm lg. hex bolt per DIN 6914 w/150mm useable thread, HDG per ASTM-A153 w/near white blast (no pickling)

SPECIFICATIONS
ASTM-A354-04 Grade BD with special 10-1.59, 10-1.60, 10-1.61 std specifications
****TL-38 submittal req'd per routing****

STARTING MATERIAL	DIA	GRADE	QTY	LOT CODE	HEAT NO.	ORIGINAL MILL
Round Bar	1.187	4140	6	LNX15	704380	Alton Steel

The product listed above was manufactured, tested, sampled, and inspected in accordance with the specification, purchase order, and any supplementary requirements and was found to meet those requirements unless otherwise noted.

1. The steel was melted and manufactured in the USA and the product was manufactured and tested in the USA.
2. Hardness Results:

Attachments:
Mill Test Report
Heat Treat Certification
Mechanical Test Report
Galvanizing Certification
Embrittlement Test Report

Deborah A. Smith
Q.A. Admin. Assistant

CERTIFIED MILL TEST REPORT

ASI ALTON STEEL, INC

Alton Steel Test Lab
#5 Cut Street
Alton, IL. 62002-9011
(618) 463-4490 EXT 2486
(618) 463-4491 (Fax)

CODE LNX15

BILL TO

The Dyson Corporation
53 Freedom Road
Painesville, OH 44077

SHIP TO

The Dyson Corporation
53 Freedom Road
Painesville, OH 44077

Date	05/17/2007	Customer PO	53622-1	**Specifications**
ASI Ord No.	16173	Customer PT.		SAE 4140
ASI Ord Line Item	1			

Item Description
Steel Bar, Hot Rolled, 1.1870, 20' 0 "

Heat Number Strand Cast, RR = 44.28:1

	Yield PSI	Tensile PSI	% Elongation	% ROA	Bend Test

CHEMICAL ANALYSIS TEST METHODS ASTM E-415 & E-1019

Heat Number	C	Mn	P	S	Si	Cu	Ni	Cr	Mo	Sn	Al	Nb/Cb	V	B	Ti	N	Ca
704380	0.42	0.81	0.015	0.026	0.28	0.26	0.090	0.936	0.164	0.015	0.003	0.027	0.005	0.0002	0.0024	0.0099	0.0014

JOMINY HARDENABILITY USING ASTM A-255 CALCULATED FROM CHEMICAL DI

Heat Number	GS	DI
704380	8	5.01

SPECIAL TEST RESULTS

ADDITIONAL COMMENTS

No mercury, lead, radium, of alpha containing material or equipment is used or deliberately added in the production of this steel. No weld or weld repairs were performed on this material. This Steel is 100% Electric Arc Furnace Melted and Rolled in the U.S.A.

Alteration or reproduction of this report, except in full, is not allowed without written approval by a representative of Alton Steel Incorporated.

Subscribed and sworn to before me, a Notary Public, in and for the county of Madison, State of Illinois

this _____ Day of _____

My commission expires_____

(Notary Public)

I hereby certify that the above tests are correct as contained in the records of ALTON STEEL INCORPORATED

Quality Leader: Rubert Cauley

R Cauley

Q.A. REVIEWED
DATE 6/1/07
DYSON

LNX

0

CERTIFICATION FORM

MODERN INDUSTRIES, INC. - HEAT TREATING DIVISION

PHONE 814/455-8061 - 814/455-8065 after 5 P.M. and Weekends FAX # 814/453-4382 613 WEST 11TH STREET, P.O. BOX 399, ERIE, PA 16512

3T Dyson Corporation

PART # A354 GRBD
P.O. # 65358
MATERIAL 4140
SPEC CORE HARDNESS .
SPEC SURFACE HARDNESS 35/37 HRC
SPECIFIED CASE DEPTH .
PROCESS ID # 30339
ORDER QUANTITY 10
QUANTITY APPROVED 10
QUANTITY CHECKED 2
OF READING PER PIECE 1
OF CONTAINERS 1
VISUAL INSPEC Inspection Dept
CUST SPEC: 1.11-2 REV 2
CUST SPEC: 800/1100 TEMPER
MILITARY: 10-1.59, 10-1.60
MILITARY: 10-1.61, 75-1.05
SCALE TYPE HRC

DESCRIPTION
INSPECTOR 405 04/03/09 14:57

INSPECTION RESULTS

PC#	RESULT	PC#	RESULT	PC#	RESULT

# OF READING	2
LO SURF HARDNESS	36.1
HI SURF HARDNESS	36.9
RANGE	.8
STANDARD DEVIATION	
AVERAGE	36.50
ACTUAL CASE DEPTH	
ACTUAL CORE HARDNESS	

HEAT CYCLE	TEMPERATURE	TIME	QUENCH MEDIA	COMMENTS
AUSTENITIZE	1550 DEGF	2.00	OIL	
TEMPER	1000 DEGF	2.00	AIR COOL	

M30 X 460MM LG. HEX BOLT BLANKS
CODE: LNX15 HEAT#: 704380 JOB NUMBER: L101180

The recording of false, fictitious or fradulent statements or entries on this document may be punishable as a felony under Federal Statute.
There are no known mercury compounds in our plant which could come in contact with these parts.
I, hereby certify that the above listed part number has been processed and inspected and the results are in accordance with your above listed specification as instructed in your purchase order referenced above.

NAME David E Docter TITLE Inspector DATE 4/03/09
David E Docter

0

L101180

A DIVISION OF J.T. ADAMS CO., INC.
4520 WILLOW PARKWAY
CLEVELAND, OHIO 44125
PHONE (216) 641-3290
FAX (216) 641-1223
www.tensile.com

TTML TENSILE TESTING METALLURGICAL LABORATORY

CERTIFIED TEST REPORT

Dyson Corporation
53 Freedom Road
Painesville OH 44077

Job No.: A9-111-490
Date: 4-23-09
Cust. PO#: 65795

Description: 2 samples 1-3/16" Dia. (Represents M30 Hex Bolt)
SO# L101178 & L101180 Cust PO# 660110-SA-017 C/O 011
Code# LNX14 & LNX15

Material: AISI 4140 Heat# 704380

Spec: ASTM A354-07a Gr. BD

TEST RESULTS

Code#	Tensile, ksi	Yield, .2% ksi	Elong., % in 4D	Red. of Area, %
Requirements (Min.):	150	130	14	40
LNX14	176	165	15	52
LNX15	168	156	15	52

Test Method: ASTM A370-08b

The above **conforms** to specifications listed.

This material tested in accordance with the Tensile Testing's Quality System Manual dated 2/15/07 Rev. D as audited and approved by Dyson. The reported results represent the actual attributes of the material tested and indicate full compliance with all applicable specification and contract requirements. We certify that the foregoing is a true copy of the data resulting from tests performed in the laboratory.

Authorized Signature

Timothy J. Adams, President

ACCREDITED
Cert No. 0161

This Report May Not Be Reproduced Except In Full
This report represents Tensile Testing interpretation of the results obtained from the test and is not to be construed as a Guaranty or Warranty of the condition of the materials tested. Tensile Testing shall not be held liable for misinterpretation of conditions, loss, damage, injury or death arising from or attributable to delay preceding a test or subsequent to performance of a test.

STORK
Materials Technology

Stork Herron Testing Laboratories

4/27/2009

Debbie Smith
Dyson Corp
53 Freedom Rd
Painesville, OH 44077-1232

Date Received: 4/24/2009

Test Report No.: DYS006-09-04-80973-2

Material Testing and Non-Destructive Testing

5405 E. Schaaf Road
Cleveland, OH 44131
USA

Telephone : (216) 524-1450
Fax : (216) 524-1459
Website : www.storkherron.com

TEST REPORT

P.O. No.: 65879

Sample Description: One (1) M30 x 3.5-6g x 460mm Hex Bolt.: Material: ASTM A354, Grade BD, Job # L101180, Customer PO# 660110-SA-017 C/O 011, Heat #/Heat Code 704380/ LNX15

MECHANICAL TESTING PER ASTM F606-07, ASTM A370-08b

	Full Size Yield .2% offset		Ultimate Strength with a 6° Wedge	
	(Lbs.)	(ksi)	(Lbs.)	(ksi)
Results:	140000	161	142500	164
Required:	113042 Min.	130 Min.	130500 Min.	150 Min.

The sample fractured in the threads.

CONFORMANCE

Sample test data is in conformance with customer requirements listed above.

QUALITY ASSURANCE STATEMENT

The above services were performed in accordance with Herron Testing Laboratories' Quality Assurance Program Edition #1, Revision 2 dated 1/30/07 as audited and approved by Dyson Corporation on 3/12/07.
This material was not contaminated by mercury or chlorinated solvents during the handling and processing at Stork-Herron Testing Laboratories facilities.

The reported results represent the actual attributes of the material tested and indicate full compliance with all applicable specification and contract requirements.

EXPORT CONTROLLED (ITAR)

THE TECHNICAL DATA AND / OR MATERIALS ASSOCIATED WITH THIS ORDER FALLS WITHIN THE DEFINITION OF THE INTERNATIONAL TRAFFIC IN ARMS REGULATIONS (ITAR) AND IS SUBJECT TO THE EXPORT CONTROL LAWS OF THE U.S. GOVERNMENT. TRANSFER OF THIS DATA BY ANY MEANS TO A FOREIGN PERSON OR FOREIGN ENTITY, WHETHER IN THE UNITED STATES OR ABROAD, WITHOUT AN EXPORT LICENSE, ITAR EXEMPTION OR OTHER APPROVAL FROM THE U.S. DEPARTMENT OF STATE, IS PROHIBITED.

The above services were performed in accordance with Herron Testing Laboratories' Quality Assurance Program Edition 1, Revision 2 dated 1/30/07. Information and statements in this report are derived from material, information and/or specifications furnished by the client and exclude any expressed or implied warranties as to the fitness of the material tested or analyzed for any particular purpose or use. This report is the confidential property of our client and may not be used for advertising purposes. This report shall not be reproduced except in full, without written approval of this laboratory. The recording of false, fictitious or fraudulent statements or entries on this document may be punished as a felony under Federal Statutes.
Sample remnants are held for a minimum of 30 days following issuance of test results, at which point they will be discarded unless notified in writing by the client. This material was not contaminated by mercury or chlorinated solvents during the handling and processing at Stork-Herron Testing Laboratories facilities.

Paula Tesar

Paula Tesar
Quality Administrator

65879

STORK
Materials Technology

Stork Herron Testing Laboratories

5/18/2009

Debbie Smith
Dyson Corp
53 Freedom Rd
Painesville, OH 44077-1232

Date Received: 5/12/2009

Test Report No.: DYS006-09-05-81926-2

Material Testing and Non-Destructive Testing

5405 E. Schaaf Road
Cleveland, OH 44131
USA

Telephone : (216) 524-1450
Fax : (216) 524-1459
Website : www.storkherron.com

TEST REPORT

P.O. No.: 66148

Sample Description: One (1) M30 X 3.5-6g X 460mm Hex Bolt, Per DIN 6914 w/150mm useable thread, Material per ASTM A354, Grade BD, HDG per ASTM-A153, per ASTM F606, Job# L101178, L101180, Customer PO # 660110-SA-017 C/O 011, Heat #/Code 704380/LNX15

MECHANICAL TESTING PER ASTM F606-08

Hydrogen Embrittlement Test 4° Wedge Torque Method	
48 Hours	395 Ft. Lbs.
Result	Visually Satisfactory

QUALITY ASSURANCE STATEMENT

The above services were performed in accordance with Herron Testing Laboratories' Quality Assurance Program Edition #1, Revision 2 dated 1/30/07 as audited and approved by Dyson Corporation on 3/12/07.

The reported results represent the actual attributes of the material tested and indicate full compliance with all applicable specification and contract requirements.

EXPORT CONTROLLED (ITAR)

THE TECHNICAL DATA AND / OR MATERIALS ASSOCIATED WITH THIS ORDER FALLS WITHIN THE DEFINITION OF THE INTERNATIONAL TRAFFIC IN ARMS REGULATIONS (ITAR) AND IS SUBJECT TO THE EXPORT CONTROL LAWS OF THE U.S. GOVERNMENT. TRANSFER OF THIS DATA BY ANY MEANS TO A FOREIGN PERSON OR FOREIGN ENTITY, WHETHER IN THE UNITED STATES OR ABROAD, WITHOUT AN EXPORT LICENSE, ITAR EXEMPTION OR OTHER APPROVAL FROM THE U.S. DEPARTMENT OF STATE, IS PROHIBITED.

The above services were performed in accordance with Herron Testing Laboratories' Quality Assurance Program Edition 1, Revision 2 dated 1/30/07. Information and statements in this report are derived from material, information and/or specifications furnished by the client and exclude any expressed or implied warranties as to the fitness of the material tested or analyzed for any particular purpose or use. This report is the confidential property of our client and may not be used for advertising purposes. This report shall not be reproduced except in full, without written approval of this laboratory. The recording of false, fictitious or fraudulent statements or entries on this document may be punished as a felony under Federal Statutes.
Sample remnants are held for a minimum of 30 days following issuance of test results, at which point they will be discarded unless notified in writing by the client. This material was not contaminated by mercury or chlorinated solvents during the handling and processing at Stork-Herron Testing Laboratories facilities.

Paula Tesar

Paula Tesar
Quality Administrator

66148

DATE 5/7/2009

THE ART GALVANIZING WKS., INC.

3935 VALLEY ROAD-CLEVELAND,OHIO 44109 PHONE 216-749-0020

PACKING SLIP/CERTIFICATIONS

TO DYSON CORP PO# 66018

NOTE: THE FOLLOWING MATERIAL HAS BEEN HOT DIP GALVANIZED TO ASTM A 153 OR ASTM A 123 (LATEST REVISION) SPECIFICATION AS APPLICABLE. A COPY OF OF THE ABOVE PURCHASE ORDER IS AN INTERRAL PART OF THIS CERTIFICATION AND SHOULD BE ATTACHED.

3.5 X 600MM ANCHOR ROD			3.5 HHN			3.5"ID WASHER		
GALV WEIGHT		543	GALV WEIGHT		179	GALV WEIGHT		16
INCHES	OZ/SQ FT		INCHES	OZ/SQ FT		INCHES	OZ/SQ FT	
0.0042	2.47		0.003	1.76		0.0042	2.47	
0.0044	2.59		0.0032	1.88		0.0044	2.59	
0.0046	2.71		0.0036	2.12		0.0046	2.71	
0.004	2.35		0.004	2.35		0.0038	2.24	
0.0038	2.24		0.0042	2.47		0.004	2.35	
AVG	2.47		*AVG*	2.12		*AVG*	2.47	

7 X 140MM COUP NUT			M30 X 460MM BOLT			M30 X 460MM BOLT		
			L NX 15					
GALV WEIGHT		362	GALV WEIGHT		56	GALV WEIGHT		49
INCHES	OZ/SQ FT		INCHES	OZ/SQ FT		INCHES	OZ/SQ FT	
0.0044	2.59		0.0028	1.65		0.0034	2.00	
0.0042	2.47		0.003	1.76		0.0036	2.12	
0.004	2.35		0.0032	1.88		0.0038	2.24	
0.0038	2.24		0.0034	2.00		0.0032	1.88	
0.0036	2.12		0.0028	1.65		0.003	1.76	
AVG	2.35		*AVG*	1.79		*AVG*	2.00	

M30 HEX NUT								
GALV WEIGHT		18	GALV WEIGHT			GALV WEIGHT		
INCHES	OZ/SQ FT		INCHES	OZ/SQ FT		INCHES	OZ/SQ FT	
0.0032	1.88		0	0.00		0	0.00	
0.0036	2.12		0	0.00		0	0.00	
0.0038	2.24		0	0.00		0	0.00	
0.004	2.35		0	0.00		0	0.00	
0.0042	2.47		0	0.00		0	0.00	
AVG	2.21		AVG	0.00		AVG	0.00	

Adrienne Klein

STATE OF CALIFORNIA-BUSINESS, TRANSPORTATION AND HOUSING AGENCY EDMUND G. BROWN, Jr., Governor

DEPARTMENT OF TRANSPORTATION -Toll Bridge Program
333 Burma Rd.
Oakland, CA 94607
(510) 622-5660, (510) 286-0550 fax

Flex your power
Be energy efficient!

January 20, 2011

Contract No. 04-0120F4
04-SF-80-13.2 / 13.9
Self-Anchored Suspension Bridge
Letter No. 05.03.01-008933

Brian A Petersen
Project Executive
American Bridge/Fluor, A JV
375 Burma Road
Oakland, CA 94607

Dear Brian Petersen,

Submittal 597, Rev. 6 – Update 1 - OBG - Miscellaneous (BKTD) – Bike Path Truss Details

Please accept this letter as an update to State Letter 05.03.01-008746 issued December 22, 2010, in response to Submittal ABF-SUB-000597R06, "OBG - Miscellaneous (BKTD) – Bike Path Truss Details," dated December 15, 2010. Please replace Sheets BKTD7 and BKTD8 with the sheet attached to this letter.

The status of Sheets BKTD7 and BKTD8 is revised from "Returned for Correction" to "Approved." The overall status of this submittal changes to "Approved."

If you have questions, please contact Gary Lai at the Working Drawing Campus.

Sincerely,

<<< ORIGINAL SIGNED >>>

WILLIAM S. CASEY
Construction Manager (OBG)

For: PETER SIEGENTHALER
Resident Engineer

Attachment

file: 05.03.01, 55.0597

American Bridge / FLUOR
A JOINT VENTURE

375 Burma Road Oakland CA 94607
Phone 510-808-4600 / Fax 510-808-4601

LETTER OF SUBMITTAL
SAS Superstructure Project

Run Date 15-Dec-10
Time 8:53 AM

Dated: 15-Dec-2010

SUBMITTAL No: ABF-SUB-000597 **Rev:** 6

To: Gary Pursell
California Department of Transportation
333 Burma Road
Oakland CA 94607
Phone: (510) 622-5100 Fax: (510) 622-5165

Co/Job # 660110
Contract # 04-0120F4
Sub/Supplier: TEN
Sub/Supplier No: TEN-APP-1707

Subject: OBG - Miscellaneous (BKTD) - BikePath Truss Details

Special Provis. (SP) REF: 10-1.59
Standard Spec. (SS) REF:
RESUBMITTAL/SUPPLEMENTAL REF:

Schedule ID:

We are sending the following attached items: ☑ Attached ☐ Via Fax

☑ Plans/Dwgs ☐ Design Report ☐ Samples
☐ Certificates of Compliance ☐ Calculations ☐ Payroll
☐ Specs ☐ Copy of Letter ☐ Change Order
☐ Schedule ☐ Invoice ☐ Other

Item	Date	Copies	Description	Drawing No	Rev	Subcon Dwg No	Rev	Status	Pages
01	07-Dec-10	6	BIKEPATH CANT. TRUSS AT PP 5.5	TEN-05-07-006213	2	BKTD7	1	Pending	
02	07-Dec-10	6	BIKEPATH CANT. TRUSS AT PP 7.5	TEN-05-07-006214	2	BKTD8	1	Pending	

These are transmitted as checked below:

☑ For Approval ☐ For Review/comment ☐ Return For Correction
☐ For Your Use ☐ For Information ☐ Other

Remarks:
HOT!

CC:

Please review / approve by : 18-Dec-2010

Submitted By: Sean Wichman
Project Manager

Checked & Sent By: <<< Original Signed >>>
Document Control

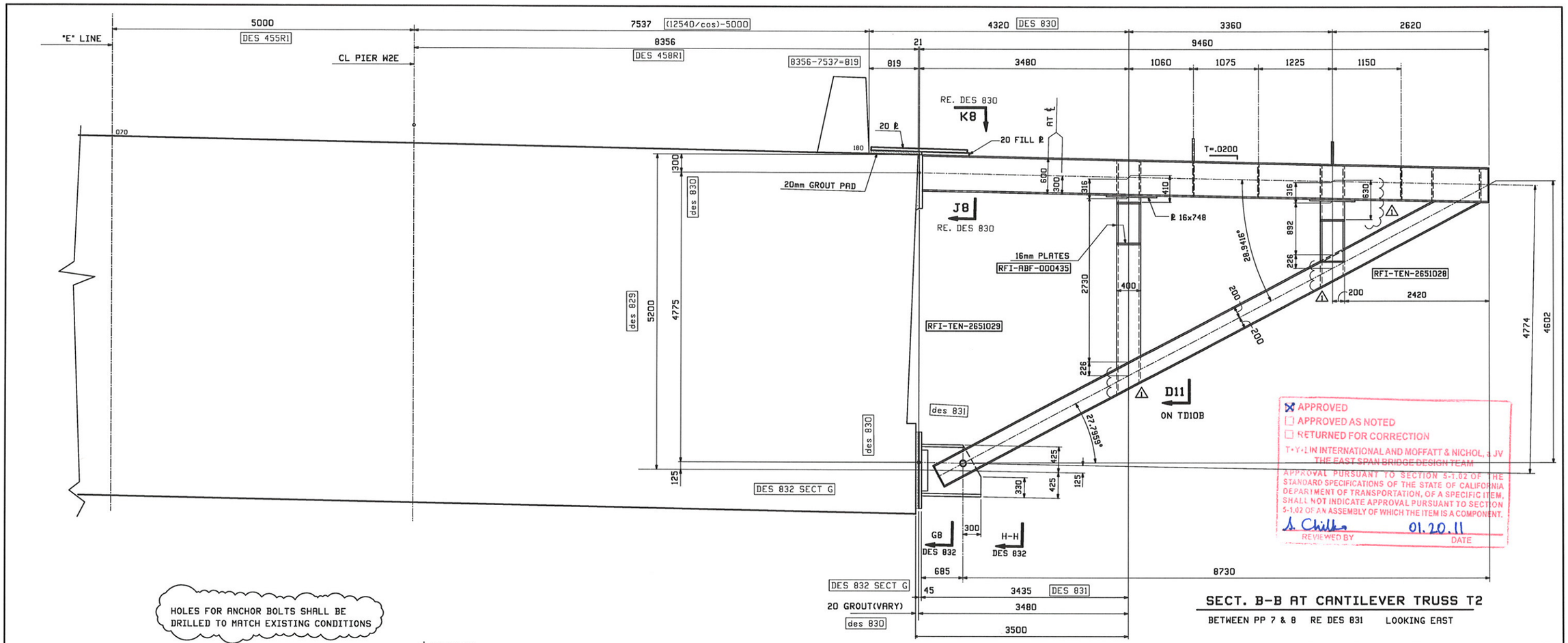

SECT. B-B AT CANTILEVER TRUSS T2

BETWEEN PP 7 & 8 RE DES 831 LOOKING EAST

APPROVED
APPROVED AS NOTED
RETURNED FOR CORRECTION
T.Y.LIN INTERNATIONAL AND MOFFATT & NICHOL, a JV
THE EAST SPAN BRIDGE DESIGN TEAM
APPROVAL PURSUANT TO SECTION 5-1.02 OF THE STANDARD SPECIFICATIONS OF THE STATE OF CALIFORNIA DEPARTMENT OF TRANSPORTATION, OF A SPECIFIC ITEM, SHALL NOT INDICATE APPROVAL PURSUANT TO SECTION 5-1.02 OF AN ASSEMBLY OF WHICH THE ITEM IS A COMPONENT.
S. Chilka 01.20.11
REVIEWED BY DATE

HOLES FOR ANCHOR BOLTS SHALL BE DRILLED TO MATCH EXISTING CONDITIONS

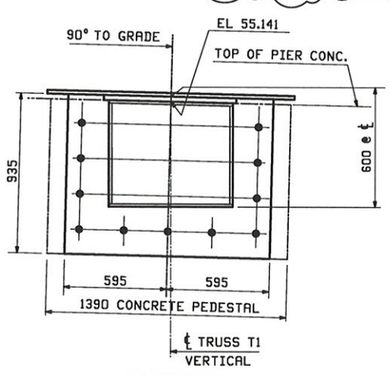

SECTION J7
SHT 830R2

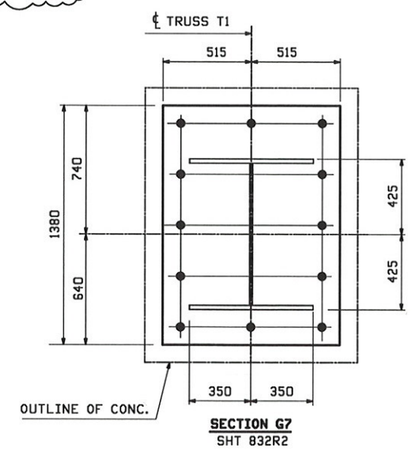

SECTION G7
SHT 832R2

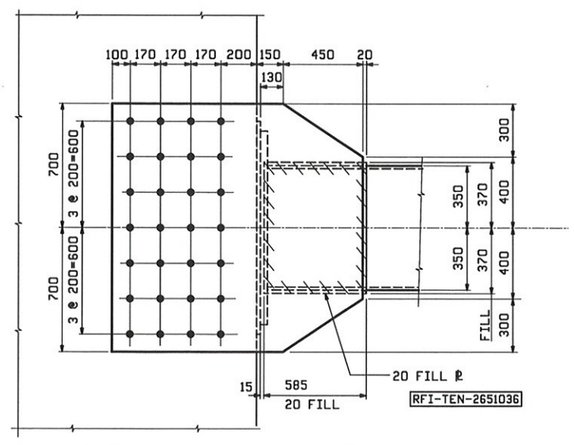

** NOTE **
THE PURPOSE OF THIS DRAWING IS TO COORDINATE GEOMETRIC CONTROL INFORMATION AND CONNECTION SPACING. THIS DWG IS SUBMITTED FOR INFORMATION ONLY & IS NOT INTENDED FOR SHOP FABRICATION. DETAIL DWGS WILL SHOW ALL WELDING AND DIMENSIONS REQ'D FOR FABRICATION.

NO.	DATE	REMARKS	BY
1	12-7-10	APPROVAL COMMENTS & ACR-RB-19	RB/PCP
A	10/15/10	REVISED AS PER ABF FIELD SURVEY & REQUESTS	WG/

REVISIONS

ZPMC
SHANGHAI ZHENHUA PORT MACHINERY CO., LTD.
CANDRAFT-TENSOR LLC 2651

SAN FRANCISCO OAKLAND BAY BRIDGE BIKEPATH
EAST SPAN - YERBA BUENA ISLAND SAN FRANCISCO COUNTY, CA.
STATE OF CALIFORNIA DEPT. OF TRANSPORTATION CONTRACT NO. 04-0120F4
ENGINEER: CALTRANS ---- T.Y.LIN / MOFFATT & NICHOL
CONTRACTOR: AMERICAN BRIDGE / FLUOR

CANTILEVER TRUSS BETWEEN PP 7 & PP 8

DRAWN	WJG	01/11/08	597R06	SHEET NO. BKTD8	ORDER NO. BIKEPATH
CHECKED	HL	10/09/10			

Update -1

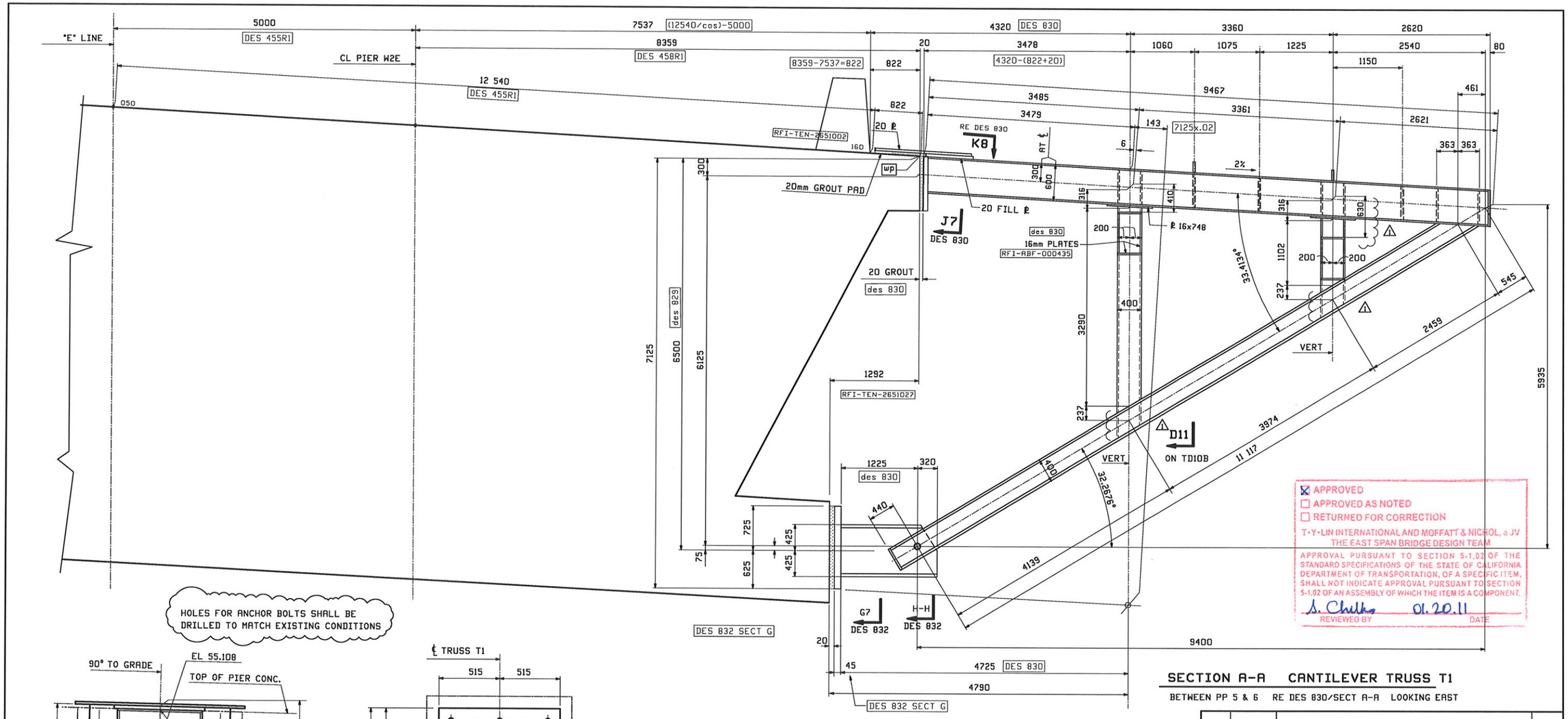

APPROVED
APPROVED AS NOTED
RETURNED FOR CORRECTION
T·Y·LIN INTERNATIONAL AND MOFFATT & NICHOL, a JV
THE EAST SPAN BRIDGE DESIGN TEAM
APPROVAL PURSUANT TO SECTION 5-1.02 OF THE STANDARD SPECIFICATIONS OF THE STATE OF CALIFORNIA DEPARTMENT OF TRANSPORTATION, OF A SPECIFIC ITEM, SHALL NOT INDICATE APPROVAL PURSUANT TO SECTION 5-1.02 OF AN ASSEMBLY OF WHICH THE ITEM IS A COMPONENT.
S. Chelko 01.20.11
REVIEWED BY DATE

SECTION A-A CANTILEVER TRUSS T1

BETWEEN PP 5 & 6 RE DES 830/SECT A-A LOOKING EAST

NOTE
THE PURPOSE OF THIS DRAWING IS TO COORDINATE GEOMETRIC CONTROL INFORMATION AND CONNECTION SPACING. THIS DWG IS SUBMITTED FOR INFORMATION ONLY & IS NOT INTENDED FOR SHOP FABRICATION. DETAIL DWGS WILL SHOW ALL WELDING AND DIMENSIONS REQ'D FOR FABRICATION.

NO.	DATE	REMARKS	BY
1	12-7-10	APPROVAL COMMENTS & ACR-RB-19	RB/PCP
A	10/14/10	REVISED AS PER ABF FIELD SURVEY & REQUESTS	WG/WL

REVISIONS

ZPMC
SHANGHAI ZHENHUA PORT MACHINERY CO., LTD.
CANDRAFT-TENSOR LLC 2651

SAN FRANCISCO OAKLAND BAY BRIDGE BIKEPATH
EAST SPAN - YERBA BUENA ISLAND SAN FRANCISCO COUNTY, CA.
STATE OF CALIFORNIA DEPT. OF TRANSPORTATION CONTRACT NO. 04-0120F4
ENGINEER: CALTRANS ---- T.Y.LIN / MOFFATT & NICHOL
CONTRACTOR: AMERICAN BRIDGE / FLUOR

CANTILEVER TRUSS BETWEEN PP 5 & PP 6

DRAWN	WJG	01/11/08	597RD6	SHEET NO. BKTD7	ORDER NO. BIKEPATH
CHECKED	WL	10/09/10			

Update-1

Designation: A123/A123M – 12

Standard Specification for Zinc (Hot-Dip Galvanized) Coatings on Iron and Steel Products[1]

This standard is issued under the fixed designation A123/A123M; the number immediately following the designation indicates the year of original adoption or, in the case of revision, the year of last revision. A number in parentheses indicates the year of last reapproval. A superscript epsilon (ε) indicates an editorial change since the last revision or reapproval.

This standard has been approved for use by agencies of the Department of Defense.

1. Scope*

1.1 This specification covers the requirements for zinc coating (galvanizing) by the hot-dip process on iron and steel products made from rolled pressed and forged shapes, castings, plates, bars, and strips.

1.2 This specification covers both unfabricated products and fabricated products, for example, assembled steel products, structural steel fabrications, large tubes already bent or welded before galvanizing, and wire work fabricated from uncoated steel wire. This specification also covers steel forgings and iron castings incorporated into pieces fabricated before galvanizing or which are too large to be centrifuged (or otherwise handled to remove excess galvanizing bath metal).

NOTE 1—This specification covers those products previously addressed in Specifications A123-78 and A386-78.

1.3 This specification does not apply to wire, pipe, tube, or steel sheet which is galvanized on specialized or continuous lines, or to steel less than 22 gage (0.0299 in.) [0.76 mm] thick.

1.4 The galvanizing of hardware items that are to be centrifuged or otherwise handled to remove excess zinc (such as bolts and similar threaded fasteners, castings and rolled, pressed and forged items) shall be in accordance with Specification A153/A153M.

1.5 Fabricated reinforcing steel bar assemblies are covered by the present specification. The galvanizing of separate reinforcing steel bars shall be in accordance with Specification A767/A767M.

1.6 This specification is applicable to orders in either inch-pound units (as A123) or SI units (as A123M). Inch-pound units and SI units are not necessarily exact equivalents. Within the text of this specification and where appropriate, SI units are shown in parentheses. Each system shall be used independently of the other without combining values in any way. In the case of orders in SI units, all testing and inspection shall be done using the metric equivalent of the test or inspection method as appropriate. In the case of orders in SI units, such shall be stated to the galvanizer when the order is placed.

2. Referenced Documents

2.1 *ASTM Standards:*[2]

A47/A47M Specification for Ferritic Malleable Iron Castings

A90/A90M Test Method for Weight [Mass] of Coating on Iron and Steel Articles with Zinc or Zinc-Alloy Coatings

A143/A143M Practice for Safeguarding Against Embrittlement of Hot-Dip Galvanized Structural Steel Products and Procedure for Detecting Embrittlement

A153/A153M Specification for Zinc Coating (Hot-Dip) on Iron and Steel Hardware

A384/A384M Practice for Safeguarding Against Warpage and Distortion During Hot-Dip Galvanizing of Steel Assemblies

A385 Practice for Providing High-Quality Zinc Coatings (Hot-Dip)

A767/A767M Specification for Zinc-Coated (Galvanized) Steel Bars for Concrete Reinforcement

A780 Practice for Repair of Damaged and Uncoated Areas of Hot-Dip Galvanized Coatings

A902 Terminology Relating to Metallic Coated Steel Products

B6 Specification for Zinc

B487 Test Method for Measurement of Metal and Oxide Coating Thickness by Microscopical Examination of Cross Section

B602 Test Method for Attribute Sampling of Metallic and Inorganic Coatings

B960 Specification for Prime Western Grade-Recycled (PWG-R) Zinc

E376 Practice for Measuring Coating Thickness by Magnetic-Field or Eddy-Current (Electromagnetic) Testing Methods

[1] This specification is under the jurisdiction of ASTM Committee A05 on Metallic-Coated Iron and Steel Products and is the direct responsibility of Subcommittee A05.13 on Structural Shapes and Hardware Specifications.

Current edition approved May 1, 2012. Published July 2012. Originally approved in 1928. Last previous edition approved in 2009 as A123/A123M - 09. DOI: 10.1520/A0123_A0123M-12.

[2] For referenced ASTM standards, visit the ASTM website, www.astm.org, or contact ASTM Customer Service at service@astm.org. For *Annual Book of ASTM Standards* volume information, refer to the standard's Document Summary page on the ASTM website.

***A Summary of Changes section appears at the end of this standard.**

Copyright © ASTM International, 100 Barr Harbor Drive, PO Box C700, West Conshohocken, PA 19428-2959, United States.

Copyright ASTM International
Provided by IHS under license with ASTM
No reproduction or networking permitted without license from IHS

Licensee=Dept of Transportation/5950087001
Not for Resale, 05/16/2013 14:43:25 MDT

3. Terminology (See Fig. 1)

3.1 *Definitions*:

3.1.1 The following terms and definitions are specific to this specification. Terminology A902 contains other terms and definitions relating to metallic-coated steel products.

3.2 *Definitions of Terms Specific to This Standard:*

3.2.1 *average coating thickness*, *n*—the average of three specimen coating thicknesses.

3.2.2 *black*, *adj*—denotes the condition of not galvanized or otherwise coated. For purposes of this specification the word "black" does not refer to the color or condition of surface, or to a surface deposit or contamination.

3.2.3 *coating thickness grade*, *n*—the numerical value from Table 1 at the intersection of a material category and a thickness range.

3.2.4 *gross dross inclusions*, *n*—the iron/zinc intermetallics present in a galvanized coating in a form other than finely dispersed pimples.

3.2.4.1 *Discussion*—These inclusions would create an exposed steel spot if they were removed from the coating. These

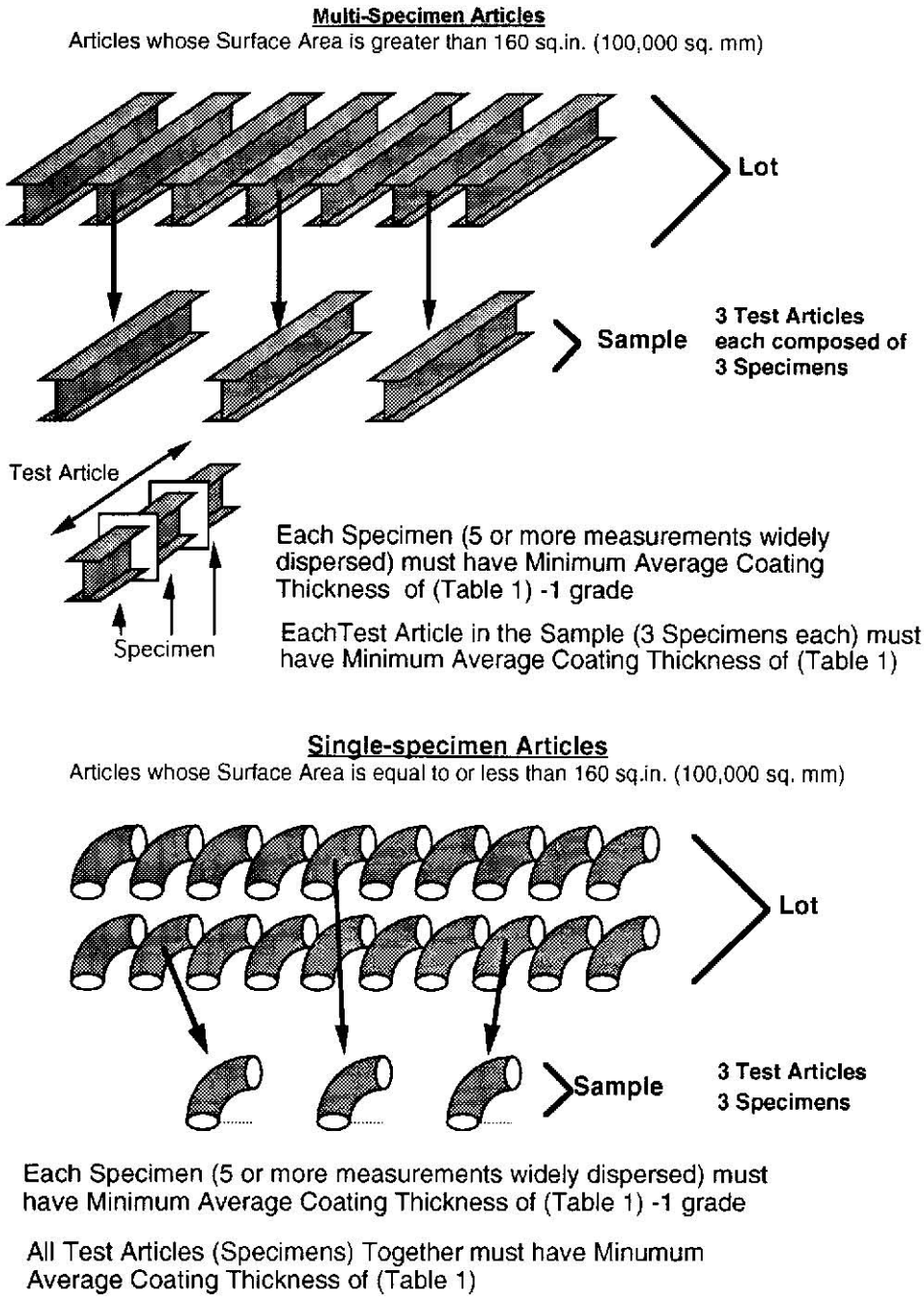

FIG. 1 Single- and Multi-Specimen Articles

Copyright ASTM International
Provided by IHS under license with ASTM
No reproduction or networking permitted without license from IHS
Licensee=Dept of Transportation/5950087001
Not for Resale, 05/16/2013 14:43:25 MDT

TABLE 1 Minimum Average Coating Thickness Grade by Material Category

Material Category	All Specimens Tested Steel Thickness Range (Measured), in. (mm)				
	<1/16 (<1.6)	1/16 to <1/8 (1.6 to <3.2)	1/8 to 3/16 (3.2 to 4.8)	>3/16 to <1/4 (>4.8 to <6.4)	≥1/4 (≥6.4)
Structural Shapes and Plate	45	65	75	75	100
Strip and Bar	45	65	75	75	100
Pipe and Tubing	45	45	75	75	75
Wire	35	50	60	65	80
Reinforcing Bar	...	...	...	...	100

inclusions are raised surfaces and are easily knocked off through contact with lifting straps or chains, tools, fixtures, or other galvanized parts.

3.2.5 *material category*, *n*—the general class or type of material or process of manufacture, or both, that nominally describes a unit of product, or from which a unit of product is made. For example, bar grating belongs to the category "strip," handrail belongs to the category "pipe," etc.

3.2.6 *multi-specimen article*, *n*—a unit of product whose surface area is greater than 160 in.^{2}[100 000 mm^2]. For thickness testing purposes, articles whose surface area is greater than 160 in.^{2} are subdivided into three continuous local sections, nominally equal in surface area, each of which constitutes a specimen. In the case of any such local section containing more than one material category or steel thickness range as delineated in Table 1, that section will contain more than one specimen (see Fig. 1).

3.2.7 *sample*, *n*—a collection of individual units of product from a single lot selected in accordance with Section 7, and intended to represent that lot for acceptance. If a sample is taken as representing the lot for acceptance, the sample shall be taken at random from the lot without regard to the perceived quality or appearance of any individual unit in the lot being sampled. The sample consists of one or more test articles.

3.2.8 *single-specimen article*, *n*—a unit of product whose surface area is equal to or less than 160 in.^{2} [100 000 mm^2] or that is centrifuged or otherwise similarly handled in the galvanizing process to remove excess galvanizing bath metal (free zinc). For thickness testing purposes, the entire surface area of each unit of product constitutes a specimen. In the case of any such article containing more than one material category or steel thickness range as delineated in Table 1, that article will contain more than one specimen (see Fig. 1).

3.2.9 *specimen*, *n*—the surface of an individual test article or a portion of a test article, upon which thickness measurements are to be performed, which is a member of a lot, or a member of a sample representing that lot. For magnetic thickness measurements, specimen excludes any area of the surface which is subject to processes (such as flame cutting, machining, threading, etc.) that can be expected to result in surface conditions not representative of the general surface condition of the test article, or is disqualified by the measurement method. The minimum average coating thickness grade for any specimen shall be one coating grade below that required for the appropriate material category and thickness in Table 1. For a unit of product whose surface area is equal to or less than 160 in.^{2} [100 000 mm^2], the entire surface area of each test article constitutes a specimen. In the case of an article containing more than one material category or steel thickness range as delineated in Table 1, that article will contain more than one specimen, as appropriate (see Fig. 1).

3.2.10 *specimen coating thickness*, *n*—the average thickness from no less than five test measurements on a specimen, when each measurement location is selected to provide the widest dispersion (in all applicable directions) of locations for the steel category of the test article within the confines of the specimen volume.

3.2.11 *test article*, *n*—an individual unit of product that is a member of the sample and that is examined for conformance to a part of this specification.

4. Ordering Information

4.1 Orders for coatings provided under this specification shall include the following:

4.1.1 Quantity (number of pieces to be galvanized) and total weight.

4.1.2 Description (type and size of products) and weight.

4.1.3 ASTM specification designation and year of issue.

4.1.4 Material identification (see 5.1) and surface condition or contamination.

4.1.5 Sampling plan, if different from 7.3.

4.1.6 Special test requirements (see 8.1).

4.1.7 Special requirements (special stacking, heavier coating weight, etc.).

4.1.8 Tagging or piece identification method.

5. Materials and Manufacture

5.1 *Steel or Iron*—The specification, grade, or designation and type and degree of surface contamination of the iron or steel in articles to be galvanized shall be supplied by the purchaser to the hot-dip galvanizer prior to galvanizing.

NOTE 2—The presence in steels and weld metal, in certain percentages, of some elements such as silicon, carbon, and phosphorus tends to accelerate the growth of the zinc-iron alloy layer so that the coating may have a matte finish with little or no outer zinc layer. The galvanizer has only limited control over this condition. The mass, shape, and amount of cold working of the product being galvanized may also affect this condition. Practice A385 provides guidance on steel selection and discusses the effects of various elements in steel compositions (for example, silicon), that influence coating weight and appearance.

5.2 *Fabrication*—The design and fabrication of the product to be galvanized are the responsibilities of the designer and the fabricator. Practices A143/A143M, A384/A384M, and A385 provide guidance for steel fabrication for optimum hot dip galvanizing and shall be complied with in both design and fabrication. Consultation between the designer, fabricator, and

Copyright ASTM International
Provided by IHS under license with ASTM
No reproduction or networking permitted without license from IHS

Licensee=Dept of Transportation/5950087001
Not for Resale, 05/16/2013 14:43:25 MDT

galvanizer at appropriate stages in the design and fabrication process will reduce future problems.

5.3 *Castings*—The composition and heat treatment of iron and steel castings shall conform to specifications designated by the purchaser. Some types of castings have been known to show potential problems with predisposition to being embrittled during the normal thermal cycle of hot-dip galvanizing. It is the responsibility of the purchaser to heat treat or otherwise allow for the possibility of such embrittling phenomena. The requirements for malleable iron castings to be galvanized shall be as stated in Specification A47/A47M.

5.4 *Zinc*—The zinc used in the galvanizing bath shall conform to Specification B6, or Specification B960, or both. If a zinc alloy is used as the primary feed to the galvanizing bath, then the base material used to make that alloy shall conform to Specification B6, or Specification B960, or both.

5.5 *Bath Composition*—The molten metal in the working volume of the galvanizing bath shall contain not less than an average value of 98.0 % zinc by weight.

NOTE 3—The galvanizer may choose to add trace amounts of certain elements (for example, aluminum, nickel, and tin) to the zinc bath to help in the processing of certain reactive steels or to enhance the cosmetic appearance of the finished product. The use of these trace elements is permitted provided that the bulk chemistry of the galvanizing bath is at least 98.0 % zinc by weight. The elements can be added to the galvanizing bath as part of a pre-alloyed zinc feed, or they can be added to the bath by the galvanizer using a master feed alloy.

6. Coating Properties

6.1 *Coating Thickness*—The average thickness of coating for all specimens tested shall conform to the requirements of Table 1 for the categories and thicknesses of the material being galvanized. Minimum average thickness of coating for any individual specimen is one coating grade less than that required in Table 1. Where products consisting of various material thicknesses or categories are galvanized, the coating thickness grades for each thickness range and material category of material shall be as shown in Table 1. In the case of orders in SI units, the values in Table 1, shall be applicable as metric units in micrometres. In the case of orders in inch-pound units, the measured value shall be converted to coating grade units by the use of Table 2. The specification of coating thicknesses heavier than those required by Table 1 shall be subject to mutual agreement between the galvanizer and the purchaser. (Fig. 2 is a graphic representation of the sampling and specimen delineation steps, and Fig. 3 is a graphic representation of the coating thickness inspection steps.)

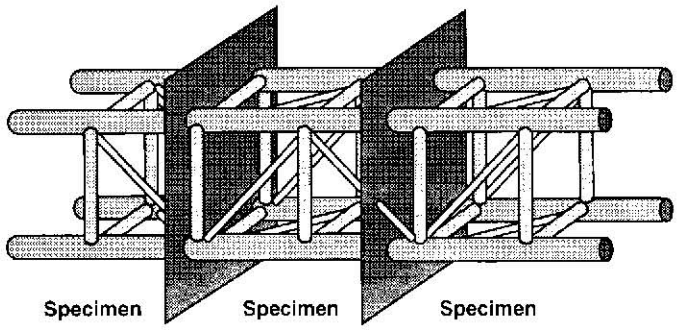

NOTE 1—Each specimen comprises nominally one third of the total surface area of the article. A minimum of five measurements should be made within the volume of each specimen, as widely dispersed within that volume as is practical, so as to represent as much as possible, the general coating thickness within that specimen volume.

FIG. 2 Articles Made of Many Components

6.1.1 For articles whose surface area is greater than 160 in.^{2} [100 000 mm^2] (multi-specimen articles), each test article in the sample must meet the appropriate minimum average coating thickness grade requirements of Table 1, and each specimen coating thickness grade comprising that overall average for each test article shall average not less than one coating grade below that required in Table 1.

6.1.2 For articles whose surface area is equal to or less than 160 in.^{2} [100 000 mm^2] (single-specimen articles), the average of all test articles in the sample must meet the appropriate minimum average coating thickness grade requirements of Table 1, and for each test article, its specimen coating thickness shall be not less than one coating grade below that required in Table 1.

6.1.3 No individual measurement, or cluster of measurements at the same general location, on a test specimen shall be cause for rejection under the coating thickness requirements of this specification provided that when those measurements are averaged with the other dispersed measurements to determine the specimen coating thickness grade for that specimen, the requirements of 6.1.1 or 6.1.2, as appropriate are met.

NOTE 4—The coating thickness grades in Table 1 represent the minimum value obtainable with a high level of confidence for the ranges typically found in each material category. While most coating thicknesses

TABLE 2 Coating Thickness Grade[A]

Coating Grade	mils	oz/ft^2	µm	g/m^2
35	1.4	0.8	35	245
45	1.8	1.0	45	320
50	2.0	1.2	50	355
55	2.2	1.3	55	390
60	2.4	1.4	60	425
65	2.6	1.5	65	460
75	3.0	1.7	75	530
80	3.1	1.9	80	565
85	3.3	2.0	85	600
100	3.9	2.3	100	705

[A] The values in micrometres (µm) are based on the Coating Grade. The other values are based on conversions using the following formulas: mils = µm × 0.03937; oz/ft^2 = µm × 0.02316; g/m^2 = µm × 7.067.

Copyright ASTM International
Provided by IHS under license with ASTM
No reproduction or networking permitted without license from IHS

Licensee=Dept of Transportation/5950087001
Not for Resale, 05/16/2013 14:43:25 MDT

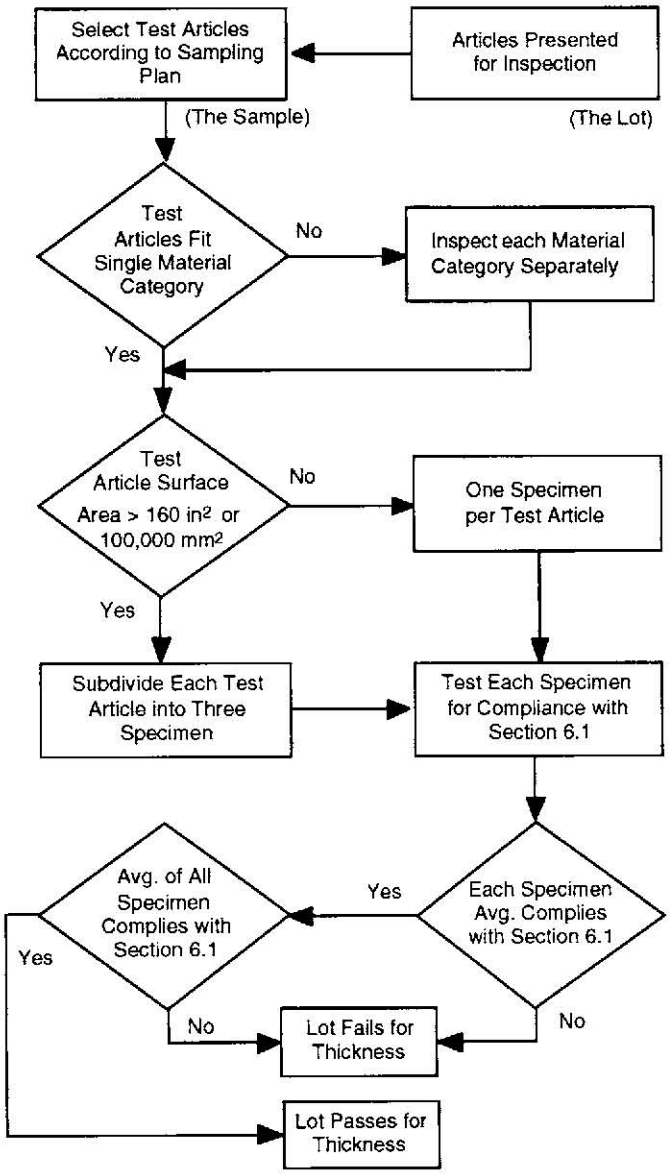

FIG. 3 Coating Thickness Inspection Steps

will be in excess of those values, some materials in each category may be less reactive (for example, because of chemistry or surface condition) than other materials of the steel category spectrum. Therefore, some articles may have a coating grade at or close to the minimum requirement shown in Table 1. In such cases, the precision and accuracy of the coating thickness measuring technique should be taken into consideration when rejecting such articles for coating thickness below that required by this specification. Purchasers desiring a guarantee of heavier coatings than the minimum thicknesses shown herein should use the special requirements (see 4.1.6) to specify coating thickness grades higher than those shown in Table 1. In addition, the purchaser should anticipate the need for test batches or extra preparation steps, or both, such as blasting before galvanizing or other methods, to attempt to reach the higher requirements with consistency. Some higher-than-standard thicknesses may be impractical or unattainable.

6.2 *Finish*—The coating shall be continuous (except as provided below), and as reasonably smooth and uniform in thickness as the weight, size, shape of the item, and necessary handling of the item during the dipping and draining operations at the galvanizing kettle will permit. Except for local excess coating thickness which would interfere with the use of the product, or make it dangerous to handle (edge tears or spikes), rejection for nonuniform coating shall be made only for plainly visible excess coating not related to design factors such as holes, joints, or special drainage problems (see Note 6). Since surface smoothness is a relative term, minor roughness that does not interfere with the intended use of the product, or roughness that is related to the as-received (un-galvanized) surface condition, steel chemistry, or steel reactivity to zinc shall not be grounds for rejection (see Note 7). Surface conditions related to deficiencies related to design, detailing, or fabrication as addressed by Practice A385 shall not be grounds for rejection. The zinc coating on threaded components of articles galvanized under this specification shall conform to that required in Specification A153/A153M. Surfaces that remain uncoated after galvanizing shall be renovated in accordance with the methods in Practice A780 unless directed by the purchaser to leave the uncoated areas untreated for subsequent renovation by the purchaser.

6.2.1 Each area subject to renovation shall be 1 in. [25 mm] or less in its narrowest dimension.

6.2.2 The total area subject to renovation on each article shall be no more than ½ of 1 % of the accessible surface area to be coated on that article, or 36 in.^{2} per short ton [256 cm^2 per metric ton] of piece weight, whichever is less.

NOTE 5—Inaccessible surface areas are those which cannot be reached for appropriate surface preparation and application of repair materials as described in Practice A780. Such inaccessible areas, for example, would be the internal surfaces of certain tanks, poles, pipes, tubes, and so forth.

6.2.3 The thickness of renovation shall be that required by the thickness grade for the appropriate material category and thickness range in Table 1 in accordance with the requirements of 6.1, except that for renovation using zinc paints, the thickness of renovation shall be 50 % higher than that required by Table 1, but not greater than 4.0 mils.

6.2.4 When areas requiring renovation exceed the criteria previously provided, or are inaccessible for repair, the coating shall be rejected.

NOTE 6—The requirements for the finish of a galvanized product address themselves to a visual type of inspection. They do not address the matter of measured coating thickness variations that can be encountered because of different steels or different thicknesses of a given steel being used in an assembly.

NOTE 7—Items which are prepared for galvanizing by abrasive cleaning will generally develop a thicker coating with a moderately rougher surface.

6.3 *Threaded Components in Assemblies*—The zinc coating on external threads shall not be subjected to a cutting, rolling, or finishing tool operation, unless specifically authorized by the purchaser. Internal threads are not prohibited from being tapped or retapped after galvanizing. Coatings shall conform to the requirements of Specification A153/A153M.

6.4 *Appearance*—Upon shipment from the galvanizing facility, galvanized articles shall be free from uncoated areas, blisters, flux deposits, and gross dross inclusions. Lumps, projections, globules, or heavy deposits of zinc which will interfere with the intended use of the material will not be

Copyright ASTM International
Provided by IHS under license with ASTM
No reproduction or networking permitted without license from IHS
Licensee=Dept of Transportation/5950087001
Not for Resale, 05/16/2013 14:43:25 MDT

permitted. Plain holes of ½-in. [12.5-mm] diameter or more shall be clean and reasonably free from excess zinc. Marks in the zinc coating caused by tongs or other items used in handling the article during the galvanizing operation shall not be cause for rejection unless such marks have exposed the base metal and the bare metal areas exceed allowable maximums from 6.2.1 and 6.2.2. The pieces shall be handled so that after galvanizing they will not freeze together on cooling.

NOTE 8—Depending upon product design or material thickness, or both, filming or excess zinc buildup in plain holes of less than ½-in. [12.5-mm] diameter may occur that requires additional work to make the holes usable as intended.

6.5 *Adherence*—The zinc coating shall withstand handling consistent with the nature and thickness of the coating and the normal use of the article, without peeling or flaking.

NOTE 9—Although some material may be formed after galvanizing, in general the zinc coating on the articles covered by this specification is too heavy to permit severe bending without damaging the coating.

7. Sampling

7.1 Sampling of each lot shall be performed for conformance with the requirements of this specification.

7.2 A lot is a unit of production or shipment from which a sample is taken for testing. Unless otherwise agreed upon between the galvanizer and the purchaser, or established within this specification, the lot shall be as follows: For testing at a galvanizer's facility, a lot is one or more articles of the same type and size comprising a single order or a single delivery load, whichever is the smaller, or any number of articles identified as a lot by the galvanizer, when these have been galvanized within a single production shift and in the same bath. For test by the purchaser after delivery, the lot consists of the single order or the single delivery load, whichever is the smaller, unless the lot identity, established in accordance with the above, is maintained and clearly indicated in the shipment by the galvanizer.

7.3 The method of selection and number of test specimens shall be agreed upon between the galvanizer and the purchaser. Otherwise, the test specimens shall be selected at random from each lot. In this case, the minimum number of specimens from each lot shall be as follows:

Number of Pieces in Lot	Number of Specimens
3 or less	all
4 to 500	3
501 to 1 200	5
1 201 to 3 200	8
3 201 to 10 000	13
10 001 and over	20

NOTE 10—Where a number of identical items are to be galvanized, a statistical sampling plan may be desired. Such a plan is contained in Test Method B602 which addresses sampling procedures for the inspection of electrodeposited metallic coatings and related finishes. If Test Method B602 is used, the level of sampling shall be agreed upon between the galvanizer and the purchaser at the time the coating order is placed.

7.4 A test specimen which fails to conform to a requirement of this specification shall not be used to determine the conformance to other requirements.

8. Test Methods

8.1 *Test Requirements*—The following tests shall be conducted to ensure that the zinc coating is being furnished in accordance with this specification. The specifying of tests for adhesion and embrittlement shall be subject to mutual agreement between the galvanizer and purchaser. Visual inspection of the coating shall be made for compliance with the requirements.

8.2 *Thickness of Coating Test*—The thickness of coating is determined by one or more of the three methods described as follows.

8.2.1 *Magnetic Thickness Measurements*— The thickness of the coating shall be determined by magnetic thickness gage measurements in accordance with Practice E376 unless the methods described in 8.2.2, 8.2.3, or 8.2.4 are used. For each specimen (as described in 3.2.9) five or more measurements shall be made at points widely dispersed throughout the volume occupied by the specimen so as to represent as much as practical, the entire surface area of the test specimen. The average of the five or more measurements thus made for each specimen is the specimen coating thickness.

8.2.1.1 For articles whose surface area is greater than 160 in.^{2} [100 000 mm^2] (multi-specimen articles as described in 3.2.6), the average of the three specimen coating thickness grades comprising each test article is the average coating thickness for that test article. A specimen must be evaluated for each steel category and material thickness within the requirements for each specimen of the test article.

8.2.1.2 For articles whose surface area is equal to or less than 160 in.^{2} [100 000 mm^2] (single-specimen articles as described in 3.2.8), the average of all specimen coating thickness grades is the average coating thickness for the sample.

8.2.1.3 In the case of threaded components, the thickness of coating shall be made on a portion of the article that does not include any threads.

8.2.1.4 The use of magnetic measurement methods is appropriate for larger articles, and is appropriate for smaller articles when there is sufficient flat surface area for the probe tip to sit flat on the surface using Practice E376.

8.2.2 *Stripping Method*—The average weight of coating shall be determined by stripping a test article, a specimen removed from a test article, or group of test articles in the case of very small items such as nails, etc., in accordance with Test Method A90/A90M unless the methods described in 8.2.1, 8.2.3, or 8.2.4 are used. The weight of coating per unit area thus determined is converted to equivalent coating thickness values in accordance with Table 2 (rounding up or down as appropriate). The thickness of coating thus obtained is the test article coating thickness, or in the case of a specimen removed from a test article, is the specimen average coating thickness.

8.2.2.1 The stripping method is a destructive test and is appropriate for single specimen articles, but is not practical for multi-specimen articles.

8.2.3 *Weighing Before and After Galvanizing*—The average weight of coating shall be determined by weighing articles before and after galvanizing, subtracting the first weight from the second and dividing the result by the surface area unless the

Copyright ASTM International
Provided by IHS under license with ASTM
No reproduction or networking permitted without license from IHS

Licensee=Dept of Transportation/5950087001
Not for Resale, 05/16/2013 14:43:25 MDT

methods described in 8.2.1, 8.2.2, or 8.2.4 are used. The first weight shall be determined after pickling and drying and the second after cooling to ambient temperature. The weight of coating per unit area thus determined is converted to equivalent coating thickness values according to Table 2 (rounding up or down as appropriate). The thickness of coating thus obtained is the test article coating thickness.

8.2.3.1 The weighing before and after method is appropriate for single-specimen articles, but is not practical for multi-specimen articles.

NOTE 11—Both the stripping method and the weighing before and after method do not take into account the weight of iron reacted from the article that is incorporated into the coating. Thus, the methods may underestimate coating weight (and therefore the calculated thickness) by up to 10 %. The accuracy of both methods will be influenced by the accuracy to which the surface area of the articles tested can be determined.

8.2.4 *Microscopy*—The thickness of coating shall be determined by cross-sectional and optical measurement in accordance with Test Method B487 unless the methods described in 8.2.1, 8.2.2, or 8.2.3 are used. The thickness thus determined is a point value. No less than five such measurements shall be made at locations on the test article which are as widely dispersed as practical, so as to be representative of the whole surface of the test article. The average of no less than five such measurements is the specimen coating thickness.

8.2.4.1 The microscopy method is a destructive test and is appropriate for single-specimen articles, but is not practical for multi-specimen articles.

8.2.5 *Referee Method*—In the event of a dispute over thickness of coating measurements, the dispute shall be resolved as follows:

8.2.5.1 For multi-specimen articles, a new sample shall be taken randomly from the lot of material, which has twice the number of test articles as the sample which failed to conform to this specification. If the lot size is such that the sample size cannot be doubled, then the sample size shall be as previous, but the number of widely dispersed sites at which measurements were made shall be doubled, and these sites will constitute the new sample. This new sample shall be measured using magnetic thickness gages which have been calibrated for accuracy against reference material thickness standards. If the lot is found to be nonconforming by the new sample, the galvanizer has the right to sort the lot for conforming articles by individual test, to re-galvanize non-conforming articles, or to renovate the nonconforming articles in accordance with 6.2.

8.2.5.2 For single-specimen articles, a new sample shall be taken randomly from the lot of material, which has twice the number of test articles as the sample which failed to conform to this specification. The test method for the new sample shall be selected by mutual agreement between the purchaser and galvanizer. If the lot is found to be nonconforming by the new sample, the galvanizer has the right to sort the lot for conforming articles by individual test, to re-galvanize non-conforming articles, or to renovate the nonconforming articles in accordance with 6.2.

8.3 *Adhesion*—Determine adhesion of the zinc coating to the surface of the base metal by cutting or prying with the point of a stout knife, applied with considerable pressure in a manner tending to remove a portion of the coating. The adhesion shall be considered inadequate if the coating flakes off in the form of a layer of the coating so as to expose the base metal in advance of the knife point. Do not use testing carried out at edges or corners (points of lowest coating adhesion) to determine adhesion of the coating. Likewise, do not use removal of small particles of the coating by paring or whittling to determine failure.

8.4 *Embrittlement*—Test for embrittlement shall be made in accordance with Practice A143/A143M. These tests shall not be required unless strong evidence of embrittlement is present.

9. Inspection, Rejection, and Retest

9.1 *Inspection by the Galvanizer*—It is the responsibility of the galvanizer to ensure compliance with this specification. This shall be achieved by an in-plant inspection program designed to maintain the coating thickness, finish, and appearance within the requirements of this specification unless the inspection is performed in accordance with 9.2.

9.2 *Inspection By the Purchaser*—The purchaser shall accept or reject material by inspection either through the galvanizer's inspector, the purchaser's inspector, or an independent inspector. The inspector representing the purchaser shall have access at all times to those areas of the galvanizer's facility which concern the application of the zinc coating to the material ordered while work on the contract of the purchaser is being performed. The galvanizer shall afford the inspector all reasonable facilities to satisfy him that the zinc coating is being furnished in accordance with this specification.

9.3 *Location*—The material shall be inspected at the galvanizer's plant prior to shipment. However, by agreement the purchaser is not prohibited from making tests which govern the acceptance or rejection of the materials in his own laboratory or elsewhere.

9.4 *Reinspection*—When inspection of materials to determine conformity with the visual requirements of 6.2 warrants rejection of a lot, the galvanizer is not prohibited from sorting the lot and submit it once again for acceptance after he has removed any nonconforming articles and replaced them with conforming articles.

9.5 The sampling plan that was used when the lot was first inspected shall be used for resampling of a sorted lot. By mutual agreement, the galvanizer is not prohibited from submitting the lot remaining after sorting and removing nonconforming articles without replacement of the nonconforming articles. In such case, the now-smaller lot shall be treated as a new lot for purposes of inspection and acceptance.

9.6 Materials that have been rejected for reasons other than embrittlement are not prohibited from being stripped and regalvanized and again submitted for inspection and test at which time they shall conform to the requirements of this specification.

10. Certification

10.1 When specified in the purchase order or contract, the purchaser shall be furnished certification that samples representing each lot have been either tested or inspected as directed by this specification and the requirements have been met.

Copyright ASTM International
Provided by IHS under license with ASTM
No reproduction or networking permitted without license from IHS

Licensee=Dept of Transportation/5950087001
Not for Resale, 05/16/2013 14:43:25 MDT

When specified in the purchase order or contract, a report of the test results shall be furnished.

11. Keywords

11.1 coatings—zinc; galvanized coatings; steel products—metallic coated; zinc coatings—steel products

SUMMARY OF CHANGES

Committee A05 has identified the location of selected changes to this standard since the last issue (A123/A123M - 09) that may impact the use of this standard. (May 15, 2012)

(*1*) Revised Table 1.

ASTM International takes no position respecting the validity of any patent rights asserted in connection with any item mentioned in this standard. Users of this standard are expressly advised that determination of the validity of any such patent rights, and the risk of infringement of such rights, are entirely their own responsibility.

This standard is subject to revision at any time by the responsible technical committee and must be reviewed every five years and if not revised, either reapproved or withdrawn. Your comments are invited either for revision of this standard or for additional standards and should be addressed to ASTM International Headquarters. Your comments will receive careful consideration at a meeting of the responsible technical committee, which you may attend. If you feel that your comments have not received a fair hearing you should make your views known to the ASTM Committee on Standards, at the address shown below.

This standard is copyrighted by ASTM International, 100 Barr Harbor Drive, PO Box C700, West Conshohocken, PA 19428-2959, United States. Individual reprints (single or multiple copies) of this standard may be obtained by contacting ASTM at the above address or at 610-832-9585 (phone), 610-832-9555 (fax), or service@astm.org (e-mail); or through the ASTM website (www.astm.org). Permission rights to photocopy the standard may also be secured from the ASTM website (www.astm.org/COPYRIGHT/).

Copyright ASTM International
Provided by IHS under license with ASTM
No reproduction or networking permitted without license from IHS

Licensee=Dept of Transportation/5950087001
Not for Resale, 05/16/2013 14:43:25 MDT

Designation: A 143/A 143M – 07

Standard Practice for Safeguarding Against Embrittlement of Hot-Dip Galvanized Structural Steel Products and Procedure for Detecting Embrittlement[1]

This standard is issued under the fixed designation A 143/A 143M; the number immediately following the designation indicates the year of original adoption or, in the case of revision, the year of last revision. A number in parentheses indicates the year of last reapproval. A superscript epsilon (ϵ) indicates an editorial change since the last revision or reapproval.

This standard has been approved for use by agencies of the Department of Defense.

1. Scope

1.1 This practice covers procedures that can be followed to safeguard against the possible embrittlement of steel hot-dip galvanized after fabrication, and outlines test procedures for detecting embrittlement. Conditions of fabrication may induce a susceptibility to embrittlement in certain steels that can be accelerated by galvanizing. Embrittlement is not a common occurrence, however, and this discussion does not imply that galvanizing increases embrittlement where good fabricating and galvanizing procedures are employed. Where history has shown that for specific steels, processes and galvanizing procedures have been satisfactory, this history will serve as an indication that no embrittlement problem is to be expected for those steels, processes, and galvanizing procedures.

1.2 This practice is applicable in either inch-pounds or SI units. Inch-pounds and SI units are not necessarily exact equivalents. Within the text of this practice and where appropriate, SI units are shown in brackets.

1.3 *This standard does not purport to address all of the safety concerns, if any, associated with its use. It is the responsibility of the user of this standard to establish appropriate safety and health practices and determine the applicability of regulatory limitations prior to use.*

2. Referenced Documents

2.1 *ASTM Standards:* [2]

F 606 Test Methods for Determining the Mechanical Properties of Externally and Internally Threaded Fasteners, Washers, Direct Tension Indicators, and Rivets

3. Terminology

3.1 *Definition*:

3.1.1 *embrittlement*, *n*—the loss or partial loss of ductility in a steel where an embrittled product characteristically fails by fracture without appreciable deformation; types of embrittlement usually encountered in galvanized steel are related to aging phenomena, cold working, and absorption of hydrogen.

4. Factors in Embrittlement

4.1 Embrittlement or loss of ductility in steel is often associated with strain-aging. Strain-aging refers to the delayed increase in hardness and strength, and loss of ductility and impact resistance which occur in susceptible steels as a result of the strains induced by cold working. The aging changes proceed slowly at room temperature, but proceed at an accelerated rate as the aging temperature is raised and may occur rapidly at the galvanizing temperature of approximately 850°F [455°C].

4.2 Hydrogen embrittlement may also occur due to the possibility of atomic hydrogen being absorbed by the steel. The susceptibility to hydrogen embrittlement is influenced by the type of steel, its previous heat treatment, and degree of previous cold work. In the case of galvanized steel, the acid pickling reaction prior to galvanizing presents a potential source of hydrogen. However, the heat of the galvanizing bath partially expels hydrogen that may have been absorbed. In practice hydrogen embrittlement of galvanized steel is usually of concern only if the steel exceeds approximately 150 ksi [1100 MPa] in ultimate tensile strength, or if it has been severely cold worked prior to pickling.

4.3 Loss of ductility of cold-worked steels is dependent on many factors including the type of steel (strength level, aging characteristics), thickness of steel, and degree of cold work, and is accentuated by areas of stress concentration such as caused by notches, holes, fillets of small radii, sharp bends, etc.

[1] This practice is under the jurisdiction of ASTM Committee A05 on Metallic-Coated Iron and Steel Products and is the direct responsibility of Subcommittee A05.13 on Structural Shapes and Hardware Specifications.

Originally Prepared by Subcommittee A05.10 on Embrittlement Investigation of Committee A05 on Corrosion of Iron and Steel and based on an investigation made by Battelle Memorial Institute under American Society for Testing and Materials' sponsorship. See *Proceedings*, Am. Soc. Testing Mats., Vol 31, Part I, 1931, p. 211; also paper by Samuel Epstein, "Embrittlement of Hot-Dip Galvanized Structural Steel," see *Proceedings* , Am. Soc. Testing Mats., Vol 32, Part II, 1932, p. 293.

Current edition approved May 1, 2007. Published June 2007. Originally approved in 1932. Last previous edition approved in 2003 as A 143/A 143M - 03.

[2] For referenced ASTM standards, visit the ASTM website, www.astm.org, or contact ASTM Customer Service at service@astm.org. For *Annual Book of ASTM Standards* volume information, refer to the standard's Document Summary page on the ASTM website.

Copyright © ASTM International, 100 Barr Harbor Drive, PO Box C700, West Conshohocken, PA 19428-2959, United States.

Copyright ASTM International
Provided by IHS under license with ASTM
No reproduction or networking permitted without license from IHS

Licensee=Dept of Transportation/5950087001
Not for Resale, 04/04/2013 12:05:00 MDT

4.4 Low temperatures increase the risk of brittle failure of all plain carbon steels including steel that has been galvanized. The rate at which this temperature loss of ductility occurs varies for different steels. The expected service temperature should thus be taken into account when selecting the steel.

5. Steels

5.1 Open-hearth, basic-oxygen, and electric-furnace steels shall be used for galvanizing. Other materials that can be galvanized include continuous cast slabs, steel or iron castings, and wrought iron.

6. Cold Working and Thermal Treatment

6.1 For intermediate and heavy shapes, plates, and hardware, cold bend radii should not be less than that which is proven satisfactory by practice or by the recommendations of the steel manufacturer. These criteria generally depend on the direction of grain, strength, and type of steel. A cold bending radius of three times (3×) the section thickness, or as recommended in *AISC Manual of Steel Construction*,[3] will ordinarily ensure satisfactory properties in the final product. Although sharper bending on thin sections can usually be tolerated, embrittlement may occur if cold bending is especially severe. If the design requires sharper bending than discussed herein, the bending should be done hot, or if done cold the material should be subsequently annealed or stress relieved as noted in 6.3.

6.2 Smaller shapes, including thickness up to ¼ in. [6.4 mm] may be cold worked by punching without subsequent annealing or stress-relieving. Shapes 5⁄16 to 11⁄16 in. [8 to 18 mm] in thickness are not seriously affected as to serviceability by cold punching or if the punching is done under good shop practice. The heavier shapes, ¾ in. [19 mm] and over, shall be reamed with at least 1⁄16 in. [1.6 mm] of metal removed from the periphery of the hole after punching, or shall be drilled, or thermally treated prior to galvanizing as noted in 6.3.

6.3 Fabrication in accordance with the principles outlined in 6.1 and 6.2 will normally obviate the need for thermal treatment. However, if required, proper thermal treatment shall precede galvanizing of the steel. For heavy cold deformation exemplified by cold rolling, sheared edges, punched holes, or cold-formed rods and bolts, subcritical annealing at temperatures from 1200 to 1300°F [650 to 705°C] should be employed. For less severe cold deformation typified by cold bending, roll forming, etc., it is advisable to limit the thermal treatment to stress relieving at a maximum of 1100°F [595°C] to avoid excessive grain growth or alternatively to fully normalize the steel at temperatures from 1600 to 1700°F [870 to 925°C]. The time at temperature should be approximately 1 h/in. [24 min/cm] of section thickness.

6.4 Flame cut copes on structural beams shall have a minimum radius of 1 in. [2.5 cm]. After cutting, the cut surface shall be ground to remove notches, grooves, and irregular surface features to leave the surface smooth.

[3] Available from American Institute of Steel Construction (AISC), One East Wacker Drive, Suite 3100, Chicago, IL 60601-2001. 9th Edition.

7. Preparation for Galvanizing

7.1 Hydrogen can be absorbed during pickling and in some instances, as noted in 4.2, may contribute to embrittlement of the galvanized product. The likelihood of this, or of surface cracking occurring, is increased by excessive pickling temperature, prolonged pickling time, and poor inhibition of the pickling acid. Heating to 300°F [150°C] after pickling and before galvanizing in most cases results in expulsion of hydrogen absorbed during pickling.

7.2 Abrasive blast cleaning followed by flash pickling may also be employed when over-pickling is of concern or when very high strength steel, ultimate tensile strength higher than 150 ksi [1100 MPa], must be galvanized. The abrasive blast cleaning does not generate hydrogen while it is cleaning the surface of the steel. The flash pickling after abrasive blast cleaning is used to remove any final traces of blast media before hot-dip galvanizing.

8. Responsibility for Avoiding Embrittlement

8.1 Design of the product and selection of the proper steel to withstand normal galvanizing operations without embrittlement are the responsibility of the designer. The fabricator shall be responsible for employing suitable fabrication procedures. The galvanizer shall employ proper pickling and galvanizing procedures.

9. Testing for Embrittlement of Steel Shapes, Steel Castings, Threaded Articles, and Hardware Items

9.1 Subject to base material and dimensional limitations, the tests given in 9.2, 9.3, 9.4, or 9.5, or a combination thereof, shall apply. If one test specimen should be found embrittled by these tests, two additional specimens should be tested. Failure of either the second or the third specimen shall be cause for rejection of the lot (see Note 1) that the samples represent.

NOTE 1—A lot is a unit of production from which a sample may be taken for testing. Unless otherwise agreed upon by the manufacturer and the purchaser, or established within this practice, the lot shall be as follows: For test at a manufacturer's facility, a lot is one or more articles of the same type and size comprising a single order or a single delivery load, whichever is the smaller, or a smaller number of articles identified as a lot by the manufacturer, when these have been galvanized within a single production shift. For test by purchaser after delivery, the lot consists of the single order or the single delivery load, whichever is the smaller, unless the lot identity, established in accordance with the above, is maintained and clearly indicated in the shipment by the manufacturer.

9.2 A bend test for embrittlement of galvanized steel hardware such as bolts, pole and tower steps, braces, rods, reinforcing bars, etc., consists of bending the article and comparing the degree of bending to that which is obtained on a similar ungalvanized article. The article, before and after galvanizing, may be clamped in a vise and using a lever if necessary, bent until cracking of the base steel occurs, or to 90° whichever is less. The galvanized article should withstand a degree of bending substantially the same as the ungalvanized article. Flaking or spalling of the galvanized coating is not to be construed as an embrittlement failure. For threaded articles, the test shall be made on the unthreaded portion.

9.3 Small steel castings and steel hardware of such shape or size that do not permit bending may be struck a sharp blow

Copyright ASTM International
Provided by IHS under license with ASTM
No reproduction or networking permitted without license from IHS
Licensee=Dept of Transportation/5950087001
Not for Resale, 04/04/2013 12:05:00 MDT

with a 2-lb [1-kg] hammer and the results for both galvanized and ungalvanized samples compared. If the article withstands such a blow in the ungalvanized condition, but after galvanizing cracks under the blow, it shall be considered embrittled.

9.4 A test for embrittlement of galvanized steel angles is detailed as follows:

9.4.1 *Test Specimen*—A test specimen with a length determined by the table in 9.4.2.1 and by Fig. 1 shall be cut from the steel angle before galvanizing. A hole shall be made in the test specimen at its midlength, using the same procedure as will be employed in the fabricated material which the specimen represents, whether this be by punching, punching and reaming, or drilling. The dimensional values, diameter, and location of hole shall be not less than those employed in the structural details. Care should be taken not to place the hole near stamped or rolled-in identification marks. The specimen shall then be galvanized. For determining the elongation after fracture, a 2-in. [51-mm] gage length (Fig. 1) shall be prick-punched in the middle of the edge of the vertical leg of the galvanized angle along a line parallel to its length and centered directly under the hole. For specimens under ½ in. [13 mm] in thickness, or those in which the distance from the edge of the hole to the edge of the angle is less than ⅜ in. [10 mm], a 1-in. [25-mm] gage length shall be used.

9.4.2 *Procedure*:

9.4.2.1 The test shall be made in a universal testing machine, or by other means such as a press with the load applied slowly, until fracture of the galvanized test specimen occurs. The length of the test specimen and the distance between the supports are shown in the following table:

Leg of Angle, l, in. [mm] (see Fig. 1)	Length Between Supports, L_1, in. [mm]	Minimum Length, L_2, in. [mm]
Up to 4 [102], incl	14 [356]	18 [457]
Over 4 to 6 [102 to 152], incl	20 [508]	24 [610]
Over 6 to 8 [152 to 203], incl	30 [762]	36 [914]

9.4.2.2 After the test, the distance along the gage length from each punch mark to the corresponding edge of the fracture shall be measured to 0.01 in. [0.25 mm] with a flexible scale and the percentage of elongation calculated from the sum of these distances.

9.4.2.3 For determining the percentage reduction of thickness after fracture, the reduction shall be measured with a ball-point micrometer at the three locations indicated in Fig. 2: namely a, outer side of hole; b, inner side of hole; and c, middle of leg. The percentage reduction of thickness shall be calculated on the basis of the original thickness of the angle and the average of the three values at a, b, and c.

9.4.2.4 The test shall be made upon galvanized specimens having a temperature not below 60°F [16°C] and not over 90°F [32°C] when tested.

9.4.3 *Requirements*—The elongation measured in accordance with 9.4.2.2 shall be not less than 5 % with the following exception: when the specimen does not show 5 % elongation, the reduction in thickness shall be measured in accordance with 9.4.2.3. The sum of the percentage of elongation plus the average percentage reduction of thickness shall not be less than 10.

9.5 For hot-dip galvanized externally threaded fasteners, an alternate test to Section 9.2 for embrittlement is detailed in Test Method F 606.

10. Keywords

10.1 coatings-zinc; galvanized coatings; steel products-metallic coated; zinc coatings-steel products

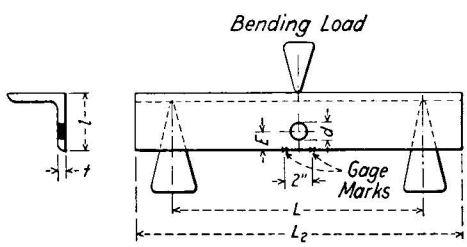

NOTE 1—2 in. = 51 mm.

FIG. 1 Specimen for Elongation after Fracture

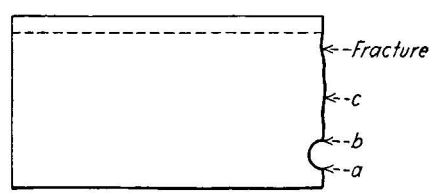

FIG. 2 Measurement of Reduction of Thickness after Fracture

ASTM International takes no position respecting the validity of any patent rights asserted in connection with any item mentioned in this standard. Users of this standard are expressly advised that determination of the validity of any such patent rights, and the risk of infringement of such rights, are entirely their own responsibility.

This standard is subject to revision at any time by the responsible technical committee and must be reviewed every five years and if not revised, either reapproved or withdrawn. Your comments are invited either for revision of this standard or for additional standards and should be addressed to ASTM International Headquarters. Your comments will receive careful consideration at a meeting of the responsible technical committee, which you may attend. If you feel that your comments have not received a fair hearing you should make your views known to the ASTM Committee on Standards, at the address shown below.

This standard is copyrighted by ASTM International, 100 Barr Harbor Drive, PO Box C700, West Conshohocken, PA 19428-2959, United States. Individual reprints (single or multiple copies) of this standard may be obtained by contacting ASTM at the above address or at 610-832-9585 (phone), 610-832-9555 (fax), or service@astm.org (e-mail); or through the ASTM website (www.astm.org).

Copyright ASTM International
Provided by IHS under license with ASTM
No reproduction or networking permitted without license from IHS

Licensee=Dept of Transportation/5950087001
Not for Resale, 04/04/2013 12:05:00 MDT

Designation: A 153/A 153M – 09

American Association State Highway and Transportation Officials Standard AASHTO No. M232

Standard Specification for Zinc Coating (Hot-Dip) on Iron and Steel Hardware[1]

This standard is issued under the fixed designation A 153/A 153M; the number immediately following the designation indicates the year of original adoption or, in the case of revision, the year of last revision. A number in parentheses indicates the year of last reapproval. A superscript epsilon (ε) indicates an editorial change since the last revision or reapproval.

This standard has been approved for use by agencies of the Department of Defense.

1. Scope*

1.1 This specification covers zinc coatings applied by the hot-dip process on iron and steel hardware. The hot-dip galvanizing process consists of parts being immersed in molten zinc for a sufficient time to allow a metallurgical reaction between iron from the steel surface and the molten zinc, resulting in the formation of Zn/Fe alloy layers bonding the coating to the steel surface.

1.2 This specification is intended to be applicable to hardware items that are centrifuged or otherwise handled to remove excess galvanizing bath metal (free zinc). Coating thickness grade requirements reflect this.

1.3 This specification is applicable to orders in either inch-pound units (as A 153) or in SI units (as A 153M). Inch-pound units and SI units are not necessarily exact equivalents. Within the text of this specification and where appropriate, SI units are shown in brackets. Each system shall be used independently of the other without combining values in any way. In the case of orders in SI units, all testing and inspection shall be done using the metric equivalent of the test or inspection method as appropriate. In the case of orders in SI units, such shall be stated to the galvanizer when the order is placed.

1.4 *This standard does not purport to address all of the safety concerns, if any, associated with its use. It is the responsibility of the user of this standard to establish appropriate safety and health practices and determine the applicability of regulatory limitations prior to use.*

2. Referenced Documents

2.1 *ASTM Standards:*[2]

A 90/A 90M Test Method for Weight [Mass] of Coating on Iron and Steel Articles with Zinc or Zinc-Alloy Coatings

A 143/A 143M Practice for Safeguarding Against Embrittlement of Hot-Dip Galvanized Structural Steel Products and Procedure for Detecting Embrittlement

A 780 Practice for Repair of Damaged and Uncoated Areas of Hot-Dip Galvanized Coatings

A 902 Terminology Relating to Metallic Coated Steel Products

B 6 Specification for Zinc

B 487 Test Method for Measurement of Metal and Oxide Coating Thickness by Microscopical Examination of Cross Section

B 960 Specification for Prime Western Grade-Recycled (PWG-R) Zinc

E 376 Practice for Measuring Coating Thickness by Magnetic-Field or Eddy-Current (Electromagnetic) Examination Methods

F 1470 Practice for Fastener Sampling for Specified Mechanical Properties and Performance Inspection

F 1789 Terminology for F16 Mechanical Fasteners

3. Terminology

3.1 *Definitions:*

[1] This specification is under the jurisdiction of ASTM Committee A05 on Metallic-Coated Iron and Steel Products and is the direct responsibility of Subcommittee A05.13 on Structural Shapes and Hardware Specifications.

Current edition approved May 1, 2009. Published May 2009. Originally approved in 1933. Last previous edition approved in 2005 as A 153/A 153M - 05.

[2] For referenced ASTM standards, visit the ASTM website, www.astm.org, or contact ASTM Customer Service at service@astm.org. For *Annual Book of ASTM Standards* volume information, refer to the standard's Document Summary page on the ASTM website.

***A Summary of Changes section appears at the end of this standard.**

Copyright © ASTM International, 100 Barr Harbor Drive, PO Box C700, West Conshohocken, PA 19428-2959, United States.

Copyright ASTM International
Provided by IHS under license with ASTM
No reproduction or networking permitted without license from IHS

Licensee=Dept of Transportation/5950087001
Not for Resale, 10/05/2012 15:12:10 MDT

3.1.1 The following terms and definitions are specific to this specification. Terminology A 902 contains other terms and definitions relating to metallic-coated steel products. Terminology F 1789 contains other terms and definitions relating to mechanical fasteners.

3.2 *Definitions of Terms Specific to This Standard:*

3.2.1 *average coating thickness*, *n*—the average of the specimen coating thickness values for the samples in an inspection lot.

3.2.2 *bare spots*, *n*—uncoated areas on the surface of the steel part that contain no measurable zinc coating.

3.2.3 *dross inclusions*, *n*—the iron/zinc intermetallics present in a galvanized coating in a form other than the layer growth of the coating.

3.2.4 *individual measurement*, *n*—the reading from a magnetic thickness gauge of a single coating spot thickness, or the microscopic reading of a coating thickness as seen in an optical microscope at one spot.

3.2.5 *inspection lot*, *n*—the quantity of identical parts cleaned, fluxed and galvanized together at one time in an appropriate container that is being submitted for acceptance as a group.

3.2.6 *malleable casting*, *n*—a steel article that has been subjected to a prolonged anneal to decarburize or graphitize the part to remove as much of the carbon as possible or to convert the carbon to graphite, which permits plastic deformation in compression without rupture.

3.2.7 *sample*, *n*—a collection of individual units of product from a single inspection lot selected in accordance with Section 6 and intended to represent that inspection lot for acceptance.

3.2.8 *specimen*, *n*—an individual test article upon which thickness measurements or weight determinations are performed.

3.2.9 *specimen coating thickness*, *n*—the average thickness from no less than five test measurements on a specimen, when each measurement location is selected to provide the widest dispersion (in all applicable directions) of locations within the specimen volume.

3.2.10 *threaded areas*, *n*—the sections of a steel part that have threads formed before hot-dip galvanizing.

4. Materials and Manufacture

4.1 *Steel or Iron*—Ferrous articles to be hot-dip zinc coated shall conform to specifications designated by the purchaser.

4.2 *Zinc*—The zinc used for the coating shall conform to Specification B 6, or Specification B 960, or both, and shall be at least equal to the grade designated as "Prime Western."

4.2.1 If a zinc alloy is used as the primary feed for the galvanizing bath, then the base material used to make that alloy shall conform to Specification B 6 or Specification B 960, or both.

4.2.2 The molten metal in the working volume of the galvanizing bath shall contain not less than an average value of 98.0 % zinc by weight [mass].

NOTE 1—The galvanizer may choose to add trace amounts of certain elements (for example, aluminum, nickel, bismuth, or tin) to the zinc bath to help in the processing of certain reactive steels or to enhance the cosmetic appearance of the finished product. The elements can be added to the galvanizing bath as a master feed alloy, or they can be added to the bath by the galvanizer as individual feeds.

4.3 *Minimum Coating Weight [Mass] or Minimum Coating Thickness*—The minimum coating weight [mass] or the minimum coating thickness shall conform to the requirements prescribed in Table 1 for the material category and thickness of material in which the article belongs.

4.4 *Threaded Articles*—The zinc coating on threads shall not be subjected to a cutting, rolling, or finishing-tool operation, unless specifically authorized by the purchaser. In order to meet overtapping allowances, tapping the threads of nuts or tapped holes after galvanizing is not prohibited.

4.5 *Touch-up and Repair*—Bare spots that are found on parts after galvanizing shall be renovated by use of the methods found in Practice A 780 if the following criteria are met. The bare spots shall have an area totalling not more than 1 % of the surface area to be coated excluding threaded areas of the piece and the bare spots shall not include any threaded areas of the

TABLE 1 Thickness or Weight [Mass] of Zinc Coating for Various Classes of Material

NOTE 1— Length of the piece, stated in Classes B-1, B-2, and B-3, refers to the finished dimension of the piece after fabrication.

Class of Material	Weight [Mass] of Zinc Coating, oz/ft^2[g/m^2] of Surface, Minimum		Coating Thickness, mils [microns], Minimum	
	Average of Specimens Tested	Any Individual Specimen	Average of Specimens Tested	Any Individual Specimen
Class A—Castings—Malleable Iron, Steel	2.00 [610]	1.80 [550]	3.4 [86]	3.1 [79]
Class B—Rolled, pressed, and forged articles (except those which would be included under Classes C and D):				
B-1—3/16 in. [4.76 mm] and over in thickness and over 15 in. [381 mm] in length	2.00 [610]	1.80 [550]	3.4 [86]	3.1 [79]
B-2—under 3/16 in. [4.76 mm] in thickness and over 15 in. [381 mm] in length	1.50 [458]	1.25 [381]	2.6 [66]	2.1 [53]
B-3—any thickness and 15 in. [381 mm] and under in length	1.30 [397]	1.10 [336]	2.2 [56]	1.9 [48]
Class C—Fasteners over 3/8 in. [9.52 mm] in diameter and similar articles. Washers 3/16 in. and 1/4 in. [4.76 and 6.35 mm] in thickness	1.25 [381]	1.00 [305]	2.1 [53]	1.7 [43]
Class D—Fasteners 3/8 in. [9.52 mm] and under in diameter, rivets, nails and similar articles. Washers under 3/16 in. [4.76 mm] in thickness	1.00 [305]	0.85 [259]	1.7 [43]	1.4 [36]

Copyright ASTM International
Provided by IHS under license with ASTM
No reproduction or networking permitted without license from IHS

Licensee=Dept of Transportation/5950087001
Not for Resale, 10/05/2012 15:12:10 MDT

piece. The thickness of the repair shall be equal to the surrounding galvanized coating except for repairs made by paints containing zinc dust in which case the thickness of the repair shall be 50 % greater than the thickness of the galvanized coating required for the class of material, but shall not be greater than 4.0 mils [100 μm]. Repair thickness measurements shall be made in accordance with Practice A 780. The galvanizer shall make repairs unless directed by the purchaser to deliver items unrepaired for subsequent renovation by the purchaser.

5. Workmanship, Finish, and Appearance

5.1 The zinc-coated articles shall be free from uncoated areas, blisters, flux deposits, dross inclusions, and other types of projections that would interfere with the intended use of the articles, or other defects not consistent with good galvanizing practice.

5.2 The zinc coating shall be smooth and reasonably uniform in thickness.

NOTE 2—Smoothness of surface is a relative term. Minor roughness that does not interfere with the intended use of the part, or roughness that is related to the as-received (ungalvanized) surface condition of the part, shall not be grounds for rejection.

NOTE 3—Since this specification is applicable to items that are centrifuged or otherwise handled to remove excess bath metal (see 1.2), irregular coating distribution is not normally encountered. Drainage problems, which manifest themselves as local excess coating thickness that would interfere with function or as edge tears or spikes that present a safety hazard because of their sharpness, are grounds for rejection under the terms of 5.1.

5.3 Embrittlement is a potential condition of steel that is cold-worked, depending on such factors as the steel type (strength level, aging characteristics), thickness, degree of cold work, and galvanizing process. The galvanizer, the designer and the fabricator shall take precautions against embrittlement. The precautions to fabricate properly and prepare the material for galvanizing to prevent embrittlement are described in Practice A 143/A 143M.

NOTE 4—Low service temperatures increase the risk of brittle failure of all plain carbon steels including those which have been galvanized. This temperature embrittling effect varies with type of steel. The expected service temperature should thus be taken into account when selecting steels for galvanizing.

5.4 Malleable castings shall be of such composition as will preclude the possibility that they become embrittled by the galvanizing process, or they shall be either cooled from the anneal, or subsequently heat-treated so as to immunize them against embrittlement.

5.5 The zinc coating shall adhere tenaciously to the surface of the base metal.

5.6 If the galvanized material covered by this specification is bent or otherwise fabricated to the degree that causes the zinc coatings to stretch or compress beyond the limit of elasticity, any cracking or flaking of the coating resulting from the bending or fabricating shall not be cause for rejection.

6. Sampling

6.1 Test specimens shall be selected at random from each inspection lot.

6.2 The method of selection and sample size shall be agreed upon between the galvanizer and the purchaser. Otherwise, the sample size selected from each lot shall be as follows:

Number of Pieces in Lot	Sample Size
3 or less	all
4 to 500	3
501 to 1200	5
1201 to 3200	8
3201 to 10 000	13
10 001 and over	20

6.3 A specimen that fails to conform to a requirement of this specification shall not be used to determine the conformance to other requirements.

6.4 The method of sampling for fasteners that are required to meet the standards of the Fastener Quality Act is described in Guide F 1470. Sample quantities and definitions of terminology are included in the referenced specification.

7. Test Methods

7.1 Tests shall be made to ensure that the zinc coating is being furnished in accordance with this specification and as specified for the following:

7.1.1 Minimum coating weight [mass] or minimum coating thickness in 4.3.

7.1.2 Finish and appearance in 5.1 and 5.2.

7.1.3 Embrittlement in 5.3 and 5.4.

7.1.4 Adherence in 5.5.

7.2 *Average Weight [Mass] of Coating*:

7.2.1 The average weight [mass] of the zinc coating shall be determined by weighing specimens after pickling and drying and again after galvanizing unless the method described in 7.2.2 is used. The number of specimens that are used to determine the average of an inspection lot shall be derived from Section 6.

NOTE 5—This method does not take into account the weight [mass] of iron reacted from the article that is incorporated into the coating. It will thus underestimate coating weight [mass] by up to approximately 10 %. Base metal reactivity will affect the extent of underestimation.

7.2.2 In the case of materials inspected after galvanizing, the average weight [mass] of coating shall be determined by stripping the number of specimens derived in Section 6 in accordance with Test Method A 90/A 90M, and averaging the results of the individual specimens, unless the method described in 7.2.1 is used.

7.3 *Average Thickness of Coating*:

7.3.1 In the case of fasteners such as bolts, nuts, and screws, the determination of the thickness of coating shall be made on a portion of the article that does not include any threads.

7.3.2 The average thickness of coating shall be determined by magnetic thickness gage in accordance with Practice E 376 unless the method described in 7.3.3 is used. The thickness shall be measured on at least five widely separated spots on a specimen. No individual spot measurement shall be cause for rejection. If an individual spot does not provide a coating thickness reading, this spot must be repaired in accordance with 4.5. The five or more individual coating thickness measurements on a specimen must be averaged to determine the specimen average coating thickness. The average coating thickness for the inspection lot is determined by averaging the

Copyright ASTM International
Provided by IHS under license with ASTM
No reproduction or networking permitted without license from IHS

Licensee=Dept of Transportation/5950087001
Not for Resale, 10/05/2012 15:12:10 MDT

specimen average coating thickness values for the number of specimens derived from Section 6.

7.3.3 The thickness of coating shall be determined by cross section and optical measurement in accordance with Test Method B 487, unless the method described in 7.3.2 is used. The thickness thus determined is a point value. No less than five such measurements shall be made at locations on the specimen, which are as widely dispersed as practical, so as to be representative of the whole surface of the specimen. The average of no less than five such measurements is the specimen average coating thickness. The average coating thickness for the inspection lot is determined by averaging the specimen average coating thickness values for the number of specimens derived from Section 6.

7.4 *Finish and Appearance*—The test for finish and appearance shall be conducted through visual inspection without additional magnification.

7.5 *Embrittlement*—Hardware that is susceptible to embrittlement shall be tested in accordance with Practice A 143/A 143M. The tests shall be performed through agreement between the galvanizer and the purchaser.

7.6 *Adherence*—Determine adherence of the zinc coating to the surface of the base metal by cutting or prying with the point of a stout knife, applied with considerable pressure in a manner tending to remove a portion of the coating. The adherence shall be considered inadequate if the coating delaminates in the form of a layer of skin so as to expose the base metal in advance of the knife point. Do not use testing carried out at edges or corners (points of lowest coating adherence) to determine adherence of coating. Likewise, do not use removal of small particles of the coating by paring or whittling to determine failure.

8. Inspection

8.1 The inspector representing the purchaser shall have access at all times while work on the contract of the purchaser is being performed, to those areas of the manufacturer's work which concern the application of the zinc coating to the material ordered. The manufacturer shall afford the inspector all reasonable facilities to satisfy him that the zinc coating is being furnished in accordance with this specification. All inspection and tests shall be made at the place of manufacture prior to shipments, unless otherwise specified, and shall be so conducted as not to interfere unnecessarily with the operation of the works.

9. Rejection and Retest

9.1 For all galvanized articles except those fasteners that must meet the requirements of the Fastener Quality Act, the following sections are used to determine rejection and retesting.

9.2 When partial inspection of materials to determine conformity with visual requirements of Section 5 warrants rejection of a lot, the galvanizer is not prohibited from sorting the lot and submitting it once again for inspection.

9.3 The number of specimens in a sample of a lot permitted to fail to conformance tests shall be agreed upon between the galvanizer and the purchaser.

9.4 If a set of test specimens fails to conform to the requirements of this specification, two additional sets shall be tested, both of which shall conform to the requirements in every respect, or the lot of material represented by the specimens shall be rejected.

9.5 Materials that have been rejected for reasons other than embrittlement are not prohibited from being stripped, regalvanized, and resubmitted for test and inspection. They shall then conform to the requirements of this specification.

10. Packaging

10.1 The supplier shall employ such methods of packaging zinc-coated articles as shall be required to ensure their receipt by the purchaser in satisfactory condition, with the use to be made of the article being taken into consideration.

11. Certification

11.1 When specified in the purchase order or contract, the purchaser shall be furnished certification that samples representing each inspection lot have been either tested or inspected as directed by this specification and the requirements have been met. When specified in the purchase order or contract, a report of the test results shall be furnished.

12. Keywords

12.1 coatings, zinc; galvanized coatings; steel hardware, zinc coated; steel products, metallic coated; zinc coatings, steel products

Copyright ASTM International
Provided by IHS under license with ASTM
No reproduction or networking permitted without license from IHS

Licensee=Dept of Transportation/5950087001
Not for Resale, 10/05/2012 15:12:10 MDT

SUMMARY OF CHANGES

Committee A05 has identified the location of selected changes to this standard since the last issue, A 153/A 153M - 05, that may impact the use of this standard. (May 1, 2009)

(*1*) Revised 4.2 and 4.2.1 to add new zinc standard B 960.

ASTM International takes no position respecting the validity of any patent rights asserted in connection with any item mentioned in this standard. Users of this standard are expressly advised that determination of the validity of any such patent rights, and the risk of infringement of such rights, are entirely their own responsibility.

This standard is subject to revision at any time by the responsible technical committee and must be reviewed every five years and if not revised, either reapproved or withdrawn. Your comments are invited either for revision of this standard or for additional standards and should be addressed to ASTM International Headquarters. Your comments will receive careful consideration at a meeting of the responsible technical committee, which you may attend. If you feel that your comments have not received a fair hearing you should make your views known to the ASTM Committee on Standards, at the address shown below.

This standard is copyrighted by ASTM International, 100 Barr Harbor Drive, PO Box C700, West Conshohocken, PA 19428-2959, United States. Individual reprints (single or multiple copies) of this standard may be obtained by contacting ASTM at the above address or at 610-832-9585 (phone), 610-832-9555 (fax), or service@astm.org (e-mail); or through the ASTM website (www.astm.org).

Copyright ASTM International
Provided by IHS under license with ASTM
No reproduction or networking permitted without license from IHS

Licensee=Dept of Transportation/5950087001
Not for Resale, 10/05/2012 15:12:10 MDT

Designation: A354 – 11

Standard Specification for Quenched and Tempered Alloy Steel Bolts, Studs, and Other Externally Threaded Fasteners[1]

This standard is issued under the fixed designation A354; the number immediately following the designation indicates the year of original adoption or, in the case of revision, the year of last revision. A number in parentheses indicates the year of last reapproval. A superscript epsilon (ε) indicates an editorial change since the last revision or reapproval.

This standard has been approved for use by agencies of the Department of Defense.

1. Scope*

1.1 This specification[2] covers the chemical and mechanical requirements of quenched and tempered alloy steel bolts, studs, and other externally threaded fasteners 4 in. and under in diameter for application at normal atmospheric temperatures, where high strength is required and for limited application at elevated temperature (Note 1). Any alloy steel capable of meeting the minimum mechanical and chemical properties set forth in this specification may be used.

NOTE 1—For bolts, studs, or other externally threaded fasteners, to be used at elevated temperatures, refer to Specification A193/A193M.

1.2 Two levels of bolting strength are covered, designated Grades BC and BD. Selection will depend upon design and the stresses and service for which the product is to be used.

NOTE 2—Quenched and tempered alloy steel bolts for structural steel joints up through 1½ in. in diameter are covered in Specification A490. Alloy steel bolts, studs, and other externally threaded fasteners (that is, heavy hex-structural bolts over 1½ in., hex bolts, anchor bolts, and countersunk bolts) exhibiting similar mechanical properties to bolts conforming to Specification A490 shall be covered by Grade BD of this specification.

When bolts of Grade BD of this specification are considered for pretentioned applications in excess of 50 % of the bolt tensile strength, the additional requirements of head size, maximum tensile strength, nut size and strength, washer hardness, tests, and inspections contained in Specification A490 should be carefully considered.

1.3 Nuts are covered in Specification A563. Unless otherwise specified, the grade and style of nut for each grade of fastener shall be as follows:

Grade of Fastener and Surface Finish	Nut Grade and Style[A]
BC, plain (or with a coating of insufficient thickness to require over-tapped nuts)	C, heavy hex
BC, zinc-coated (or with a coating thickness requiring over-tapped nuts)	DH, heavy hex
BD, all finishes	DH, heavy hex

[A] Nuts of other grades and styles having specified proof load stresses (Specification A563, Table 3) greater than the specified grade and style of nut are suitable.

1.4 The values stated in inch-pound units are to be regarded as the standard.

1.5 Terms used in this specification are defined in Terminology F1789 unless otherwise defined herein.

2. Referenced Documents

2.1 *ASTM Standards:*[3]

A193/A193M Specification for Alloy-Steel and Stainless Steel Bolting for High Temperature or High Pressure Service and Other Special Purpose Applications

A490 Specification for Structural Bolts, Alloy Steel, Heat Treated, 150 ksi Minimum Tensile Strength

A563 Specification for Carbon and Alloy Steel Nuts

A751 Test Methods, Practices, and Terminology for Chemical Analysis of Steel Products

B695 Specification for Coatings of Zinc Mechanically Deposited on Iron and Steel

D3951 Practice for Commercial Packaging

F436 Specification for Hardened Steel Washers

F606 Test Methods for Determining the Mechanical Properties of Externally and Internally Threaded Fasteners, Washers, Direct Tension Indicators, and Rivets

[1] This specification is under the jurisdiction of ASTM Committee F16 on Fasteners and is the direct responsibility of Subcommittee F16.02 on Steel Bolts, Nuts, Rivets and Washers.

Current edition approved Dec. 15, 2011. Published December 2011. Originally approved in 1952. Last previous edition approved in 2007 as A354 – 07a. DOI: 10.1520/A0354-11.

[2] For *ASME Boiler and Pressure Vessel Code* applications see related Specification SA-354 in Section II of that Code.

[3] For referenced ASTM standards, visit the ASTM website, www.astm.org, or contact ASTM Customer Service at service@astm.org. For *Annual Book of ASTM Standards* volume information, refer to the standard's Document Summary page on the ASTM website.

***A Summary of Changes section appears at the end of this standard.**

Copyright © ASTM International, 100 Barr Harbor Drive, PO Box C700, West Conshohocken, PA 19428-2959, United States.

Copyright ASTM International
Provided by IHS under license with ASTM
No reproduction or networking permitted without license from IHS

Licensee=Dept of Transportation/5950087001
Not for Resale, 01/18/2013 17:16:59 MST

F788/F788M Specification for Surface Discontinuities of Bolts, Screws, and Studs, Inch and Metric Series
F1470 Practice for Fastener Sampling for Specified Mechanical Properties and Performance Inspection
F1789 Terminology for F16 Mechanical Fasteners
F2329 Specification for Zinc Coating, Hot-Dip, Requirements for Application to Carbon and Alloy Steel Bolts, Screws, Washers, Nuts, and Special Threaded Fasteners

2.2 *ASME Standards:*[4]

B1.1 Unified Screw Threads
B18.2.1 Square and Hex Bolts and Screws, Inch Series
B18.24 Part Identifying Number (PIN) Code System Standard for B18 Fastener Products

3. Ordering Information

3.1 Orders for bolts and studs (including nuts and accessories) under this specification shall include the following:

3.1.1 ASTM designation and year of issue,

3.1.2 Name of product (that is, bolt or stud),

3.1.3 Grade (that is, BC or BD),

3.1.4 Quantities (number of pieces by size, including nuts),

3.1.5 Size and length,

3.1.6 Washers—Specify quantity and size (separate from bolts) (4.3),

3.1.7 *Zinc Coating*—When zinc-coated Grade BC fasteners are required, specify the zinc-coating process required, for example hot-dip, mechanically deposited, or no preference (see 4.4).

3.1.8 *Other Finishes*—Specify other protective finish, if required.

3.1.9 Specify if inspection at point of manufacture is required,

3.1.10 Specify if Certification (Section 14) is required, and

3.1.11 Specify additional testing (Section 9) or special requirements.

3.1.12 For establishment of a part identifying system, see ASME B18.24.

4. Materials and Manufacture

4.1 The steel shall be made by the open-hearth, electric-furnace, or basic-oxygen process.

4.2 All fasteners shall be heat-treated. At the option of the manufacturer, heat treatment may be performed on the raw material, during the manufacturing operations, or after final machining. Heat treatment shall consist of quenching in a liquid medium (except Grade BD sizes 1½ in. and smaller shall be quenched in oil) from above the transformation temperature and then temperating by reheating to a temperature of not less than 800°F (427°C) for Grade BC and for Grade BD.

4.3 When used, suitable hardened washers shall be quenched and tempered (non-carburized) in accordance with Specification F436.

4.4 *Zinc Coatings, Hot-Dip and Mechanically Deposited*:

4.4.1 When zinc-coated fasteners are required, the purchaser shall specify the zinc coating process, for example, hot-dip, mechanically deposited, or no preference.

4.4.2 When "hot-dip" is specified, the fasteners shall be zinc coated by the hot-dip process in accordance with the requirements of Specification F2329.

4.4.3 When mechanically deposited is specified, the fasteners shall be zinc-coated by the mechanical-deposition process in accordance with the requirements of Class 55 of Specification B695.

4.4.4 When no preference is specified, the supplier may furnish either a hot-dip zinc coating in accordance with Specification F2329, or a mechanically deposited zinc coating in accordance with Specification B695, Class 55. Threaded components (bolts and nuts) shall be coated by the same zinc-coating process and the supplier's option is limited to one process per item with no mixed processes in a lot.

NOTE 3—When the intended application requires that assembled tension exceeds 50 % of minimum bolt proof load, an anti-galling lubricant may be needed. Application of such a lubricant to nuts and a test of the lubricant efficiency are provided in Supplementary Requirement S1 of Specification A563 and should be specified when required.

4.5 Zinc-coated bolts and nuts shall be shipped in the same container unless specifically requested otherwise by the purchaser.

NOTE 4—Research conducted on bolts of similar material and manufacture indicates that hydrogen-stress cracking or stress cracking corrosion may occur on hot-dip galvanized Grade BD bolts.

5. Chemical Composition

5.1 All fasteners shall be made from alloy steel conforming to the chemical composition requirements in accordance with Table 1. The steel shall contain sufficient alloying elements to qualify it as an alloy steel.

NOTE 5—Steel is considered to be alloy, by the American Iron and Steel Institute, when the maximum of the range given for the content of alloying elements exceeds one or more of the following limits: manganese, 1.65 %; silicon, 0.60 %; copper, 0.60 %; or in which a definite range or a definite minimum quantity of any of the following elements is specified or required within the limits of the recognized field of constructional alloy steels: aluminum, chromium up to 3.99 %, cobalt, columbium, molybdenum, nickel, titanium, tungsten, vanadium, zirconium, or any other alloying elements added to obtain a desired alloying effect.

5.2 Product analysis may be made by the purchaser from finished material representing each lot of fasteners. The chemical composition thus determined shall conform to the requirements given in Table 1. Choice of alloy steel composition necessary to ensure meeting the specified mechanical requirements shall be made by the manufacturer and shall be reported to the purchaser for information purposes only.

5.3 Application of heats of steel to which bismuth, selenium, tellurium, or lead has been intentionally added shall not be permitted.

5.4 Chemical analyses shall be performed in accordance with Test Methods, Practices, and Terminology A751.

6. Mechanical Properties

6.1 Fasteners shall not exceed the maximum hardness specified in Table 2. Fasteners less than three diameters in length

[4] Available from American Society of Mechanical Engineers (ASME), ASME International Headquarters, Three Park Ave., New York, NY 10016-5990, http://www.asme.org.

Copyright ASTM International
Provided by IHS under license with ASTM
No reproduction or networking permitted without license from IHS

Licensee=Dept of Transportation/5950087001
Not for Resale, 01/18/2013 17:16:59 MST

TABLE 1 Chemical Requirements

Alloy Steel		
Element	Heat Analysis, %	Product Analysis, %
Carbon:		
For sizes through 1½ in.	0.30 to 0.53	0.28 to 0.55
For sizes larger than 1½ in.	0.35 to 0.53	0.33 to 0.55
Manganese, min	0.60	0.57
Phosphorus, max	0.035	0.040
Sulfur, max	0.040	0.045
Alloying Elements	[A]	[A]

Alloy Steel with Boron Addition		
Element	Heat Analysis, %	Product Analysis, %
Carbon		
For sizes through 1 ½ in.	0.30-0.48	0.28-0.50
For sizes larger than 1 ½ in.	0.35-0.53	0.35-0.55
Manganese, min	0.60	0.57
Phosphorus, max	0.040	0.045
Sulfur, max	0.040	0.045
Boron	0.0005-0.003	0.0005-0.003
Alloying Elements	[A]	[A]

[A] Steel, as defined by the American Iron and Steel Institute, shall be considered to be alloy when the maximum of the range given for the content of alloying elements exceeds one or more of the following limits: Manganese, 1.65 %; silicon, 0.60 %; copper, 0.60 % or in which a definite range or a definite minimum quantity of any of the following elements is specified or required within the limits of the recognized field of constructional alloy steels: aluminum, chromium up to 3.99 %, cobalt, columbium, molybdenum, nickel, titanium, tungsten, vanadium, zirconium, or any other alloying elements added to obtain a desired alloying effect.

TABLE 2 Hardness Requirements for Full-Size Fasteners

Size, in.	Grade	Hardness			
		Brinell		Rockwell C	
		Minimum	Maximum	Minimum	Maximum
¼ to 2½	BC	255	331	26	36
Over 2½	BC	235	311	22	33
¼ to 2½	BD	311	363	33	39
Over 2½	BD	293	363	31	39

and studs less than four diameters in length shall have hardness values not less than the minimum nor more than the maximum hardness limits required in Table 2, as hardness is the only requirement.

6.2 Fasteners 1⅜ in. in diameter or less for Grade BC and 1¼ in. in diameter or less for Grade BD, other than those excepted in 6.1, shall be tested full size and shall conform to the tensile strength and either the proof load or the yield strength requirements in accordance with Table 3.

6.3 Fasteners larger than 1⅜ in. in diameter for Grade BC and fasteners larger than 1¼ in. in diameter for Grade BD, other than those excepted in 6.1, shall preferably be tested full size and when so tested, shall conform to the tensile strength and either the proof load or yield strength requirements in accordance with Table 3. When equipment of sufficient capacity for full-size testing is not available, or when the length of the fastener makes full-size testing impractical, machined specimens shall be tested and shall conform to the requirements in accordance with Table 4. In the event that fasteners are tested by both full-size and by the machined test specimen methods, the full-size test shall govern if a controversy between the two methods exists.

6.4 For fasteners on which both hardness and tension tests are performed, acceptance based on tensile requirements shall take precedence in the event that there is controversy over low readings of hardness tests.

7. Dimensions

7.1 *Bolts*—Unless otherwise specified, the bolts shall be Hex Head with dimensions conforming to the latest issue of ASME B18.2.1.

7.2 *Studs*—Studs shall have dimensions conforming to those specified by the purchaser.

7.3 *Threads*:

7.3.1 Unless otherwise specified, threads shall be the Unified National Coarse Thread Series as specified in B1.1, and shall have Class 2 A tolerances.

7.3.2 When specified, threads shall be the Unified National Fine Thread Series, 8-Pitch Thread Series for sizes over 1 in. or 14-Pitch UNS on 1 in. size as specified in ANSI B1.1 and shall have Class 2A tolerances.

7.3.3 Unless otherwise specified, bolts and studs to be used with nuts or tapped holes that have been tapped oversize, in accordance with Specification A563, shall have Class 2A threads before hot dip or mechanically deposited zinc coating. After zinc coating, the maximum limit of pitch and major diameter may exceed the Class 2A limit by the following amount:

Diameter, in.	Oversize Limit, in. (mm)[A]
¼	0.016
5/16 , ⅜	0.017
7/16 , ½	0.018
9/16 to ¾ , incl	0.020
⅞	0.022
1.0 to 1¼ , incl	0.024
1⅜ , 1½	0.027
1¾ to 4.0, incl	0.050

[A] These values are the same as the overtapping required for zinc-coated nuts in Specification A563.

8. Workmanship

8.1 Surface discontinuity limits shall be in accordance with Specification F788/F788M.

9. Number of Tests

9.1 *Testing Responsibility*:

9.1.1 Each lot shall be tested by the manufacturer prior to shipment in accordance with the lot identification control quality assurance plan in 9.2 through 9.6.

9.1.2 When fasteners are furnished by a source other than the manufacturer, the responsible party as defined in 12.1 shall be responsible for ensuring that all tests have been performed and the fasteners comply with the requirements of this specification.

9.2 *Purpose of Lot Inspection*—The purpose of a lot inspection program is to ensure that each lot conforms to the requirements of this specification. For such a plan to be fully effective it is essential that secondary processors, distributors,

Copyright ASTM International
Provided by IHS under license with ASTM
No reproduction or networking permitted without license from IHS

Licensee=Dept of Transportation/5950087001
Not for Resale, 01/18/2013 17:16:59 MST

TABLE 3 Tensile Requirements for All Full-Size Fasteners—Inch-Pound Units

Bolt Size, in.	Threads per inch	Stress Area,[A] in.^{2}	Grade BC			Grade BD		
			Tensile Strength, min, lbf[B]	Proof Load, min, lbf[C]	Yield Strength (0.2 % offset), min, lbf[D]	Tensile Strength, min, lbf[E]	Proof Load, min, lbf[F]	Yield Strength (0.2 % offset), min, lbf[G]
1	2	3	4	5	6	7	8	9
¼	20	0.0318	4 000	3 350	3 450	4 750	3 800	4 100
¼	28	0.0364	4 550	3 820	3 950	5 450	4 350	4 700
5/16	18	0.0524	6 550	5 500	5 700	7 850	6 300	6 800
5/16	24	0.0580	7 250	6 090	6 300	8 700	6 950	7 500
⅜	16	0.0775	9 700	8 150	8 450	11 650	9 300	10 075
⅜	24	0.0878	11 000	9 220	9 550	13 200	10 500	11 400
7/16	14	0.1063	13 300	11 150	11 600	15 950	12 750	13 850
7/16	20	0.1187	14 840	12 470	12 900	17 800	14 200	15 400
½	13	0.1419	17 750	14 900	15 450	21 300	17 050	18 500
½	20	0.1599	19 990	16 790	17 400	24 000	19 200	20 750
9/16	12	0.182	22 750	19 100	19 850	27 300	21 850	23 600
9/16	18	0.203	25 400	21 400	22 100	30 400	24 400	26 350
⅝	11	0.226	28 250	23 750	24 650	33 900	27 100	29 400
⅝	18	0.256	32 000	26 800	27 900	38 400	30 700	33 250
¾	10	0.334	41 750	35 050	36 400	50 100	40 100	43 400
¾	16	0.373	46 600	39 100	40 650	56 000	44 800	48 450
⅞	9	0.462	57 750	48 500	50 350	69 300	55 450	60 100
⅞	14	0.509	63 600	53 400	55 450	76 400	61 100	66 150
1	8	0.606	75 750	63 650	66 050	90 900	72 700	78 800
1	12	0.663	82 900	69 700	72 250	99 400	79 600	86 150
1	14 UNS	0.679	84 900	71 300	74 400	101 900	81 500	88 250
1⅛	7	0.763	95 400	80 100	83 150	114 450	91 550	99 200
1⅛	8	0.790	98 750	82 950	86 200	118 500	94 800	102 700
1⅛	12	0.856	107 000	89 800	93 300	128 400	102 700	111 250
1¼	7	0.969	121 150	101 750	105 600	145 350	116 300	126 000
1¼	8	1.000	125 000	105 000	109 000	150 000	120 000	130 000
1¼	12	1.073	134 100	112 600	116 950	161 000	128 800	139 450
1⅜	6	1.155	144 400	121 300	125 900	173 250	138 600	150 200
1⅜	8	1.233	154 150	129 450	134 400	185 000	148 000	160 300
1⅜	12	1.315	164 400	138 100	143 300	197 200	157 800	170 950
1½	6	1.405	175 650	147 550	153 150	210 750	168 600	182 500
1½	8	1.492	186 500	156 650	162 250	233 800	175 050	194 000
1½	12	1.581	197 600	166 000	172 300	237 200	189 700	205 500
1¾	5	1.90	237 500	199 500	207 100	285 000	228 000	247 000
1¾	8	2.08	260 000	218 400	226 700	312 000	249 600	270 000
2	4½	2.50	312 500	262 500	272 500	375 000	300 000	325 000
2	8	2.77	346 250	290 850	301 950	415 000	332 400	360 000
2¼	4½	3.25	406 250	341 250	354 250	487 000	390 000	422 500
2¼	8	3.56	445 000	373 800	388 050	534 000	422 200	462 800
2½	4	4.00	500 000	420 000	436 000	600 000	480 000	520 000
2½	8	4.44	550 000	466 200	483 950	666 000	532 800	577 200
2¾	4	4.93	566 950	468 350	488 050	690 200	517 650	566 950
2¾	8	5.43	624 450	515 850	537 550	750 200	570 150	624 450
3	4	5.97	686 550	567 150	591 050	835 800	626 850	686 550
3	8	6.51	748 650	618 450	644 500	911 400	683 550	748 650
3¼	4	7.10	816 500	674 500	702 900	994 000	745 500	816 500
3¼	8	7.69	884 350	730 550	761 300	1 076 600	807 650	884 350
3½	4	8.33	957 950	791 350	824 650	1 166 200	874 650	957 950
3½	8	8.96	1 030 400	851 200	887 050	1 254 400	940 800	1 030 400
3¾	4	9.66	1 110 900	917 700	956 350	1 352 400	1 014 300	1 110 900
3¾	8	10.34	1 199 100	983 300	1 023 650	1 447 600	1 085 700	1 189 100
4	4	11.08	1 274 200	1 052 600	1 096 900	1 551 200	1 163 400	1 274 200
4	8	11.81	1 358 200	1 122 000	1 169 200	1 653 400	1 240 050	1 358 150

[A] Stress Area, in.^{2}= $0.7854\ [D - 0.9743/n]^2$ where D = nominal diameter, in., and n = threads/in.
[B] Based on 125 000 psi for sizes ¼ to 2½ in., inclusive, and on 115 000 psi for sizes over 2½ to 4 in., inclusive.
[C] Based on 105 000 psi for sizes ¼ to 2½ in., inclusive, and on 95 000 psi for sizes over 2½ to 4 in., inclusive.
[D] Based on 109 000 psi for sizes ¼ to 2½ in., inclusive, and on 99 000 psi for sizes over 2½ to 4 in., inclusive.
[E] Based on 150 000 psi for sizes ¼ to 2½ in., inclusive, and on 140 000 psi for sizes over 2½ to 4 in., inclusive.
[F] Based on 120 000 psi for sizes ¼ to 2½ in., inclusive, and on 105 000 psi for sizes over 2½ to 4 in., inclusive.
[G] Based on 130 000 psi for sizes ¼ to 2½ in., inclusive, and on 115 000 psi for sizes over 2½ to 4 in., inclusive.

Copyright ASTM International
Provided by IHS under license with ASTM
No reproduction or networking permitted without license from IHS

Licensee=Dept of Transportation/5950087001
Not for Resale, 01/18/2013 17:16:59 MST

TABLE 4 Mechanical Requirements for Machined Specimens

Grade	Size, in.	Tensile Strength min, psi	Yield Strength (0.2 % offset), min, psi	Elongation in 2 in. min, %	Reduction of Area, min, %
BC	¼ to 2½ , incl	125 000	109 000	16	50
BC	Over 2½	115 000	99 000	16	45
BD	¼ to 2½ , incl	150 000	130 000	14	40
BD	Over 2½	140 000	115 000	14	40

and purchasers maintain the identification and integrity of each lot until the product is installed.

9.3 *Lot Processing*—All fasteners shall be processed in accordance with a lot identification-control quality assurance plan. The manufacturer, secondary processors, and distributors shall identify and maintain the integrity of each lot of fasteners from raw-material selection through all processing operations and treatments to final packing and shipment. Each lot shall be assigned its own lot-identification number, each lot shall be tested, and the inspection test reports for each lot shall be retained.

9.4 *Lot Definition*—A lot is a quantity of a uniquely identified fastener product of the same nominal size and length produced consecutively at the initial operation from a single mill heat of material and heat treatment lot and processed at one time, by the same process, in the same manner so that statistical sampling is valid. The identity of the lot is maintained throughout all subsequent operations and packaging.

9.5 *Number of Tests*—The minimum number of tests from each production lot for the tests specified below shall be in accordance with Guide F1470.

Hardness
Tensile
Proof Load
Coating Weight/Thickness
Workmanship (Surface Discontinuities Section 8)

9.5.1 The number of tests for dimensional and thread fit compliance shall be in accordance with the quality assurance provisions of the referenced dimensional standards.

9.6 If any test specimen shows defective machining it may be discarded and another specimen substituted.

10. Test Methods

10.1 Test methods shall be conducted in accordance with Test Methods F606.

10.2 Proof load, rather than yield strength determination is preferred and shall be the arbitration method for fasteners 1¼ in. and under in diameter.

10.3 Hexagon bolts shall be tested by the wedge tension method. Fracture shall be in the body or threads of the bolt without any fracture at the junction of the head and body.

10.3.1 At the option of the manufacturer, the yield strength test (Method 2, Yield Strength paragraph of Test Methods F606) and the wedge tension test (Wedge Tension Testing of Full-Size Product paragraph, both from the Test Method section of Test Methods F606) may be accomplished concurrently to satisfy 10.2 and 10.3.

10.4 Studs and bolts other than those in 10.3 shall be tested by the axial tension method.

10.4.1 At the option of the manufacturer, the yield strength test and the axial tension test may be accomplished concurrently to satisfy 10.2 and 10.4.

10.5 The speed of testing determined with a free running crosshead shall be a maximum of ⅛ in. (3.2 mm)/min for the bolt proof load (or yield strength) determination and a maximum of 1 in. (25.4 mm)/min for the tensile strength determination.

11. Inspection

11.1 If the inspection described in 11.2 is required by the purchaser, it shall be specified in the inquiry and contract or purchase order.

11.2 The inspector representing the purchaser shall have free entry to all parts of the manufacturer's works that concern the manufacture of the material ordered. The manufacturer shall afford the inspector all reasonable facilities to satisfy him that the material is being furnished in accordance with this specification. All tests and inspections required by the specification that are requested by the purchaser's representative shall be made before shipment, and shall be conducted as not to interfere unnecessarily with the operation of the works.

12. Responsibility

12.1 The party responsible for the fastener shall be the organization that supplies the fastener to the purchaser.

13. Rejection and Rehearing

13.1 Material that fails to conform to the requirements of this specification may be rejected. Rejection should be reported to the producer or supplier promptly and in writing. In case of dissatisfaction with the results of the test, the producer or supplier may make claim for a rehearing.

14. Certification

14.1 When specified on the purchase order, the manufacturer or supplier, whichever is the responsible party in accordance with Section 12, shall furnish the purchaser a test report which includes the following:

14.1.1 Product description, grade, quantity, ASTM Specification Number and issue date,

14.1.2 Alloy grade (AISI, SAE, UNS, etc.), heat analysis, and heat number, and type of quench,

14.1.3 Results of hardness, tensile, and proof load tests, as applicable,

14.1.4 Statement of compliance to Protective Coating Specification (if applicable),

14.1.5 Statement of compliance with the surface discontinuity requirements of Specification F788/F788M,

14.1.6 Statement of compliance dimensionally,

14.1.7 Report, describe, or illustrate manufacturer's markings and their location,

14.1.8 Lot number, purchase order number, and date shipped,

14.1.9 Country of origin, and

14.1.10 Title and signature of the individual assigned certification responsibility by the company officers, with complete mailing address.

Copyright ASTM International
Provided by IHS under license with ASTM
No reproduction or networking permitted without license from IHS

Licensee=Dept of Transportation/5950087001
Not for Resale, 01/18/2013 17:16:59 MST

14.2 Failure to include all the required information on the test report shall be cause for rejection.

15. Product Marking

15.1 *Manufacturers Identification*—All products shall be marked by the manufacturer with a unique identifier to identify the manufacturer or private label distributor, as appropriate.

15.2 *Grade Identification*:

15.2.1 All Grade BC products shall be marked "BC".

15.2.2 All Grade BD products shall be marked "BD". In addition to the "BD" marking, the product may be marked with 6 radial lines 60° apart if manufactured from alloy steel conforming to the requirements of this specification.

15.3 *Marking Location and Methods*:

15.3.1 Bolts shall be marked on the top of the bolt head.

15.3.2 Where studs have both coarse and fine threads, all markings shall appear on the coarse thread end or, if preferred, the manufacturer's identification shall appear on the fine thread end and the grade marking on the coarse thread end.

15.3.3 Continuous thread studs may be marked on either end.

15.3.4 All markings may be raised or depressed at the manufacturer's option.

15.3.5 Grade and manufacturer's or private label distributor's identification shall be separate and distinct. The two identifications shall preferably be in different locations and when on the same level shall be separated by at least two spaces.

16. Packaging and Package Marking

16.1 *Packaging*:

16.1.1 Unless otherwise specified, packaging shall be in accordance with Practice D3951.

16.1.2 When special packaging requirements are required, they shall be defined at the time of the inquiry and order.

16.2 *Package Marking*:

16.2.1 Each shipping unit shall include or be plainly marked with the following information:

16.2.1.1 ASTM designation and grade,

16.2.1.2 Size,

16.2.1.3 Name and brand or trademark of the manufacturer,

16.2.1.4 Number of pieces,

16.2.1.5 Purchase order number, and

16.2.1.6 Country of origin.

17. Keywords

17.1 alloy steel; bolts; steel; studs

SUPPLEMENTARY REQUIREMENTS

S1. Marking

S1.1 Studs that are continuously threaded with the same class of thread shall be marked on each end with the marking in accordance with Section 15.

S1.2 Marking small sizes (customarily less than 0.375 in. (9.525 mm) may not be practical. Consult the producer for the minimum size that can be marked.

SUMMARY OF CHANGES

Committee F16 has identified the location of selected changes to this standard since the last issue (A354-07a) that may impact the use of this standard. (Approved Dec. 15, 2011.)

(*1*) *Revised*—Table 1.

ASTM International takes no position respecting the validity of any patent rights asserted in connection with any item mentioned in this standard. Users of this standard are expressly advised that determination of the validity of any such patent rights, and the risk of infringement of such rights, are entirely their own responsibility.

This standard is subject to revision at any time by the responsible technical committee and must be reviewed every five years and if not revised, either reapproved or withdrawn. Your comments are invited either for revision of this standard or for additional standards and should be addressed to ASTM International Headquarters. Your comments will receive careful consideration at a meeting of the responsible technical committee, which you may attend. If you feel that your comments have not received a fair hearing you should make your views known to the ASTM Committee on Standards, at the address shown below.

This standard is copyrighted by ASTM International, 100 Barr Harbor Drive, PO Box C700, West Conshohocken, PA 19428-2959, United States. Individual reprints (single or multiple copies) of this standard may be obtained by contacting ASTM at the above address or at 610-832-9585 (phone), 610-832-9555 (fax), or service@astm.org (e-mail); or through the ASTM website (www.astm.org). Permission rights to photocopy the standard may also be secured from the ASTM website (www.astm.org/COPYRIGHT/).

Copyright ASTM International
Provided by IHS under license with ASTM
No reproduction or networking permitted without license from IHS

Licensee=Dept of Transportation/5950087001
Not for Resale, 01/18/2013 17:16:59 MST

Designation: A490 – 12

American Association State Highway and Transportation Officials Standard
AASHTO No.: M 253

Standard Specification for Structural Bolts, Alloy Steel, Heat Treated, 150 ksi Minimum Tensile Strength[1]

This standard is issued under the fixed designation A490; the number immediately following the designation indicates the year of original adoption or, in the case of revision, the year of last revision. A number in parentheses indicates the year of last reapproval. A superscript epsilon (ε) indicates an editorial change since the last revision or reapproval.

This standard has been approved for use by agencies of the Department of Defense.

1. Scope*

1.1 This specification covers two types of quenched and tempered, alloy steel, heavy hex structural bolts having a tensile strength of 150 to 173 ksi.

1.2 These bolts are intended for use in structural connections. These connections are covered under the requirements of the Specification for Structural Joints Using Specification A325 or A490 bolts, approved by the Research Council on Structural Connections; endorsed by the American Institute of Steel Construction and by the Industrial Fastener Institute.[2]

1.3 The bolts are furnished in sizes ½ to 1½ in., inclusive. They are designated by type denoting chemical composition as follows:

Type	Description
Type 1	Medium carbon alloy steel
Type 2	Withdrawn in 2002
Type 3	Weathering steel

1.4 This specification provides that heavy hex structural bolts shall be furnished unless other dimensional requirements are specified on the purchase order.

1.5 Terms used in this specification are defined in Terminology F1789 unless otherwise defined herein.

1.6 For metric bolts, see Specification A490M Classes 10.9 and 10.9.3

1.7 The values stated in inch-pound units are to be regarded as standard. No other units of measurement are included in this standard.

1.8 The following safety hazards caveat pertains only to the Test Methods portion, Section 12 of this specification: *This standard does not purport to address all of the safety concerns, if any, associated with its use. It is the responsibility of the user of this standard to establish appropriate safety and health practices and determine the applicability of regulatory limitations prior to use.*

2. Referenced Documents

2.1 *ASTM Standards:*[3]

A194/A194M Specification for Carbon and Alloy Steel Nuts for Bolts for High Pressure or High Temperature Service, or Both

A325 Specification for Structural Bolts, Steel, Heat Treated, 120/105 ksi Minimum Tensile Strength

A354 Specification for Quenched and Tempered Alloy Steel Bolts, Studs, and Other Externally Threaded Fasteners

A490M Specification for High-Strength Steel Bolts, Classes 10.9 and 10.9.3, for Structural Steel Joints (Metric)

A563 Specification for Carbon and Alloy Steel Nuts

A751 Test Methods, Practices, and Terminology for Chemical Analysis of Steel Products

D3951 Practice for Commercial Packaging

E384 Test Method for Knoop and Vickers Hardness of Materials

E709 Guide for Magnetic Particle Testing

E1444 Practice for Magnetic Particle Testing

F436 Specification for Hardened Steel Washers

F606 Test Methods for Determining the Mechanical Properties of Externally and Internally Threaded Fasteners, Washers, Direct Tension Indicators, and Rivets

F788/F788M Specification for Surface Discontinuities of Bolts, Screws, and Studs, Inch and Metric Series

F959 Specification for Compressible-Washer-Type Direct Tension Indicators for Use with Structural Fasteners

F1136 Specification for Zinc/Aluminum Corrosion Protective Coatings for Fasteners

F1470 Practice for Fastener Sampling for Specified Mechanical Properties and Performance Inspection

[1] This specification is under the jurisdiction of ASTM Committee F16 on Fasteners and is the direct responsibility of Subcommittee F16.02 on Steel Bolts, Nuts, Rivets and Washers.

Current edition approved April 1, 2012. Published April 2012. Originally approved in 1964. Last previous edition approved in 2011 as A490 – 11. DOI: 10.1520/A0490-12.

[2] Available from American Institute of Steel Construction (AISC), One E. Wacker Dr., Suite 700, Chicago, IL 60601-2001, http://www.aisc.org.

[3] For referenced ASTM standards, visit the ASTM website, www.astm.org, or contact ASTM Customer Service at service@astm.org. For *Annual Book of ASTM Standards* volume information, refer to the standard's Document Summary page on the ASTM website.

***A Summary of Changes section appears at the end of this standard.**

Copyright © ASTM International, 100 Barr Harbor Drive, PO Box C700, West Conshohocken, PA 19428-2959, United States.

Copyright ASTM International
Provided by IHS under license with ASTM
No reproduction or networking permitted without license from IHS

Licensee=Dept of Transportation/5950087001
Not for Resale, 12/28/2012 15:03:18 MST

F1789 Terminology for F16 Mechanical Fasteners
F2328 Test Method for Determining Decarburization and Carburization in Hardened and Tempered Threaded Steel Bolts, Screws and Studs
F2833 Specification for Corrosion Protective Fastener Coatings with Zinc Rich Base Coat and Aluminum Organic/Inorganic Type
G101 Guide for Estimating the Atmospheric Corrosion Resistance of Low-Alloy Steels

2.2 *ASME Standards:*[4]

B1.1 Unified Screw Threads
B18.2.6 Fasteners for Use in Structural Applications
B18.24 Part Identification Number (PIN) Code System Standard for B18 Fastener Products

2.3 *IFI Standard:*[5]

IFI 144 Test Evaluation Procedures for Coating Qualification Intended for Use on High-Strength Bolts

3. Ordering Information

3.1 Orders for heavy hex structural bolts under this specification shall include the following:

3.1.1 Quantity (number of pieces of bolts and accessories);

3.1.2 Size, including nominal bolt diameter, thread pitch, and bolt length. The thread length shall not be changed;

3.1.3 Name of product: heavy hex structural bolts, or other such bolts as specified;

3.1.4 Type of bolt (Type 1 or 3). When type is not specified, either Type 1 or Type 3 shall be furnished at the supplier's option;

3.1.5 ASTM designation and year of issue,

3.1.6 Other components such as nuts, washers, and washer-type direct tension indicators, if required;

3.1.7 Test Reports, if required (see Section 15); and

3.1.8 Protective coating per Specification F1136, Grade 3, if required. See 4.3.

3.1.9 Protective coating per Specification F2833, Grade 1, if required. See 4.3.

3.1.10 Special requirements.

3.1.11 For establishment of a part identifying system, see ASME B18.24.

NOTE 1—A typical ordering description follows: 1000 pieces 1–8 in. dia × 4 in. long heavy hex structural bolt, Type 1, *ASTM A490 – 02;* each with two hardened washers, ASTM F436 Type 1; and one heavy hex nut, ASTM A563 Grade DH.

3.2 *Recommended Nuts*:

3.2.1 Nuts conforming to the requirements of Specification A563 are the recommended nuts for use with Specification A490 heavy hex structural bolts. The nuts shall be of the class and have a surface finish for each type of bolt as follows:

Bolt Type and Finish	Nut Class and Finish
1, plain (uncoated)	A563—DH, DH3 plain (uncoated)
1, coated in accordance with Specification F1136, Grade 3 or Specification F2833, Grade 1.	A563—coated in accordance with Specification F1136, Grade 5 or Specification F2833, Grade 1.
3, weathering steel	A563—DH3, weathering steel

3.2.2 Alternatively, nuts conforming to Specification A194/A194M Gr. 2H plain (uncoated) are considered a suitable substitute for use with Specification A490 Type 1 heavy hex structural bolts.

3.3 *Recommended Washers*—Washers conforming to Specification F436 are the recommended washers for use with Specification A490 heavy hex structural bolts. The washers shall have a surface finish for each type of bolt as follows:

Bolt Type and Finish	Washer Finish
1, plain (uncoated)	plain (uncoated)
1, coated in accordance with F1136, Grade 3 or F2833, Grade 1.	plain, coated in accordance with F1136, Grade 3 or F2833, Grade 1.
3, weathering steel	weathering steel

3.4 *Other Accessories*—When compressible washer type direct tension indicators are specified to be used with these bolts, they shall conform to Specification F959 Type 490.

4. Materials and Manufacture

4.1 *Heat Treatment*—Type 1 and Type 3 bolts shall be heat treated by quenching in oil from the austenitic temperature and then tempered by reheating to a temperature of not less than 800°F.

4.2 *Threading*—The threads shall be cut or rolled.

4.3 *Protective Coatings*:

4.3.1 When a protective coating is required and specified, the bolts shall be coated with Zinc/Aluminum Corrosion Protective Coatings in accordance with Specification F1136, Grade 3 or Specification F2833, Grade 1. These coatings have been qualified based on the findings of an investigation founded on IFI 144. [6]

4.3.2 No other metallic coatings are permitted unless authorized by Committee F16. Future consideration of any coating will be based on results of testing performed in accordance with the procedures in IFI 144, and submitted to Committee F16 for review (See note 2).

NOTE 2—For more detail see the H. E. Townsend Report "Effects of Zinc Coatings on Stress Corrosion Cracking and Hydrogen Embrittlement of Low Alloy Steel," published in Metallurgical Transactions, Vol. 6, April 1975.

5. Chemical Composition

5.1 Type 1 bolts shall be alloy steel conforming to the chemical composition specified in Table 1. The steel shall contain sufficient alloying elements to qualify it as an alloy steel (see Table 1, footnote A.).

5.2 Type 3 bolts shall be weathering steel conforming to the chemical composition requirements in Table 2. See Guide G101 for methods of estimating the atmospheric corrosion resistance of low alloy steel.

[4] Available from American Society of Mechanical Engineers (ASME), ASME International Headquarters, Three Park Ave., New York, NY 10016-5990, http://www.asme.org.

[5] Available from Industrial Fastener Institute, (IFI), 6363 Oak Tree Boulevard, Independence, OH 44131. http://www.industrial-fasteners.org.

[6] Supporting data have been filed at ASTM International Headquarters and may be obtained by requesting Research Report RR:F16-1001.

Copyright ASTM International
Provided by IHS under license with ASTM
No reproduction or networking permitted without license from IHS

Licensee=Dept of Transportation/5950087001
Not for Resale, 12/28/2012 15:03:18 MST

TABLE 1 Chemical Requirements for Type 1 Bolts

Alloy Steel		
Element	Heat Analysis, %	Product Analysis, %
Carbon		
For sizes through 1⅜ in.	0.30–0.48	0.28–0.50
For size 1½ in.	0.35–0.53	0.33–0.55
Phosphorus, max	0.040	0.045
Manganese, min	0.60	0.57
Sulfur, max	0.040	0.045
Alloying Elements	[A]	[A]
Alloy Steel with Boron Addition		
Element	Heat Analysis, %	Product Analysis, %
Carbon		
For sizes through 1⅜ in.	0.30-0.48	0.28-0.50
For size 1½ in.	0.35-0.53	0.35-0.55
Manganese, min	0.60	0.57
Phosphorus, max	0.040	0.045
Sulfur, max	0.040	0.045
Boron	0.0005-0.003	0.0005-0.003
Alloying Elements	[A]	[A]

[A]Steel, as defined by the American Iron and Steel Institute, shall be considered to be alloy when the maximum of the range given for the content of alloying elements exceeds one or more of the following limits: Manganese, 1.65 %; silicon, 0.60 %; copper, 0.60 % or in which a definite range or a definite minimum quantity of any of the following elements is specified or required within the limits of the recognized field of constructional alloy steels: aluminum, chromium up to 3.99 %, cobalt, columbium, molybdenum, nickel, titanium, tungsten, vanadium, zirconium, or any other alloying elements added to obtain a desired alloying effect.

TABLE 2 Chemical Requirements for Type 3 Bolts

Element	Heat Analysis, %	Product Analysis, %
Carbon		
Sizes 0.75 in. and smaller	0.20–0.53	0.19–0.55
Sizes larger than 0.75 in.	0.30–0.53	0.28–0.55
Manganese, min	0.40	0.37
Phosphorus, max	0.035	0.040
Sulfur, max	0.040	0.045
Copper	0.20–0.60	0.17–0.63
Chromium, min	0.45	0.42
Nickel, min	0.20	0.17
or		
Molybdenum, min	0.15	0.14

5.3 Product analyses made on finished bolts representing each lot shall conform to the product analysis requirements specified in Tables 1 and 2, as applicable.

5.4 Heats of steel to which bismuth, selenium, tellurium, or lead has been intentionally added shall not be used for bolts furnished to this specification. Compliance with this requirement shall be based on certification that steels having these elements intentionally added were not used.

5.5 Chemical analyses shall be performed in accordance with Test Methods, Practices, and Terminology A751.

6. Mechanical Properties

6.1 *Hardness*—The bolts shall conform to the hardness specified in Table 3.

6.2 *Tensile Properties*:

6.2.1 Except as permitted in 6.2.1.1 for long bolts and 6.2.1.2 for short bolts, sizes 1.00 in. and smaller having a nominal length of 2¼ *D* and longer and sizes larger than 1.00 in. having a nominal length of 3*D* and longer shall be wedge tested full size and shall conform to the minimum and maximum wedge tensile load, and proof load or alternative proof load specified in Table 4. The load achieved during proof load testing shall be equal to or greater than the specified proof load.

6.2.1.1 When the length of the bolt makes full-size testing impractical, machined specimens shall be tested and shall conform to the requirements specified in Table 5. When bolts are tested by both full-size and machined specimen methods, the full-size test shall take precedence.

6.2.1.2 Sizes 1.00 in. and smaller having a nominal length shorter than 2¼ *D* down to 2*D*, inclusive, that cannot be wedge tensile tested shall be axially tension tested full size and shall conform to the minimum tensile load and proof load or alternate proof load specified in Table 4. Sizes 1.00 in. and smaller having a nominal length shorter than 2*D* and sizes larger than 1.00 in. with nominal lengths shorter than 3D that cannot be axially tensile tested shall be qualified on the basis of hardness.

6.2.2 For bolts on which hardness and tension tests are performed, acceptance based on tensile requirements shall take precedence in the event of low hardness readings.

7. Carburization/Decarburization

7.1 This test is intended to evaluate the presence or absence of carburization and decarburization as determined by the difference in microhardness near the surface and core.

7.2 *Requirements*:

7.2.1 *Carburization*—The bolts shall show no evidence of a carburized surface when evaluated in accordance with 12.2.

7.2.2 *Decarburization*—Hardness value differences shall not exceed the requirements set forth for decarburization in Test Method F2328 materials when evaluated in accordance with 12.2.

8. Dimensions

8.1 *Head and Body*:

TABLE 3 Hardness Requirements for Bolts ½ to 1½ in. Nominal Size

Size, in.	Nominal Length, in.	Brinell		Rockwell C	
		min	max	min	max
½ to 1, incl.	Less than 2*D*	311	352	33	38
	2*D* and longer	. . .	352	. . .	38
Over 1 to 1½ , incl.	Less than 3*D*	311	352	33	38
	3*D* and longer	. . .	352	. . .	38

Copyright ASTM International
Provided by IHS under license with ASTM
No reproduction or networking permitted without license from IHS

Licensee=Dept of Transportation/5950087001
Not for Resale, 12/28/2012 15:03:18 MST

TABLE 4 Tensile Load Requirements for Bolts Tested Full-Size

Bolt Size, Threads per Inch, and Series Designation	Stress Area,[A] in.^{2}	Tensile Load,[B] lbf		Proof Load,[B] lbf	Alternative Proof Load,[B] lbf
		min	max	Length Measurement Method	Yield Strength Method
Column 1	Column 2	Column 3	Column 4	Column 5	Column 6
½-13 UNC	0.142	21 300	24 600	17 050	18 500
⅝-11 UNC	0.226	33 900	39 100	27 100	29 400
¾-10 UNC	0.334	50 100	57 800	40 100	43 400
⅞-9 UNC	0.462	69 300	79 950	55 450	60 100
1-8 UNC	0.606	90 900	104 850	72 700	78 800
1⅛-7 UNC	0.763	114 450	132 000	91 550	99 200
1¼-7 UNC	0.969	145 350	167 650	116 300	126 000
1⅜-6 UNC	1.155	173 250	199 850	138 600	150 200
1½-6 UNC	1.405	210 750	243 100	168 600	182 600

[A] The stress area is calculated as follows:

$$A_s = 0.7854\,[D - (0.9743/n)]^2$$

where:
A_s = stress area, in.^{2}
D = nominal bolt size, and
n = threads per inch.

[B] Loads tabulated and loads to be used for tests of full-size bolts larger than 1½ in. in diameter are based on the following:

Bolt Size	Column 3	Column 4	Column 5	Column 6
½ to 1½ in., incl	150 000 psi	173 000 psi	120 000 psi	130 000 psi

TABLE 5 Tensile Strength Requirements for Specimens Machined from Bolts

Bolt Size, in.	Tensile Strength, psi		Yield Strength (0.2 % offset), min, psi	Elongation in 2 in. or 50 mm, min, %	Reduction of Area, min, %
	min	max			
½ to 1½ in., incl	150 000	173 000	130 000	14	40

8.1.1 Unless otherwise specified, bolts shall conform to the dimensions for heavy hex structural bolts specified in ASME B18.2.6.

8.1.2 The thread length shall not be changed from that specified in ASME B18.2.6 for heavy hex structural bolts. Bolts requiring thread lengths other than those required by this specification shall be ordered under Specification A354 Gr. BD.

8.2 *Threads*—Threads shall be the Unified Coarse Thread Series as specified in ASME B1.1 and shall have Class 2A tolerances.

9. Workmanship

9.1 The allowable limits, inspection, and evaluation of the surface discontinuities, quench cracks, forging cracks, head bursts, shear bursts, seams, folds, thread laps, voids, tool marks, nicks, and gouges shall be in accordance with Specification F788/F788M.

10. Magnetic Particle Inspection for Longitudinal Discontinuities and Transverse Cracks

10.1 *Requirements*:

10.1.1 Each sample representative of the lot shall be magnetic particle inspected for longitudinal discontinuities and transverse cracks.

10.1.2 The lot, as represented by the sample, shall be free from nonconforming bolts, as defined in Specification F788/F788M, when inspected in accordance with 10.2.1-10.2.3.

10.2 *Inspection Procedure*:

10.2.1 The inspection sample shall be selected at random from each lot in accordance with Practice F1470 and examined for longitudinal discontinuities and transverse cracks.

10.2.2 Magnetic particle inspection shall be conducted in accordance with Guide E709 or Practice E1444. Guide E709 shall be used for referee purposes. If any nonconforming bolt is found during the manufacturer's examination of the lot selected in 10.2.1, the lot shall be 100 % magnetic particle inspected, and all nonconforming bolts shall be removed and scrapped or destroyed.

10.2.3 Eddy current or liquid penetrant inspection shall be an acceptable substitute for the 100 % magnetic particle inspection when nonconforming bolts are found and 100 % inspection is required. On completion of the eddy current or liquid penetrant inspection, a random sample selected from each lot in accordance with Practice F1470 shall be re-examined by the magnetic particle method. In case of controversy, the magnetic particle test shall take precedence.

10.2.4 Magnetic particle indications of themselves shall not be cause for rejection. If in the opinion of the quality assurance

Copyright ASTM International
Provided by IHS under license with ASTM
No reproduction or networking permitted without license from IHS

Licensee=Dept of Transportation/5950087001
Not for Resale, 12/28/2012 15:03:18 MST

representative the indications may be cause for rejection, a sample taken in accordance with Practice F1470 shall be examined by microscopic examination or removal by surface grinding to determine if the indicated discontinuities are within the specified limits.

11. Number of Tests and Retests

11.1 *Testing Responsibility*:

11.1.1 Each lot shall be tested by the manufacturer prior to shipment in accordance with the lot identification control quality assurance plan in 11.2-11.5.

11.1.2 When bolts are furnished by a source other than the manufacturer, the Responsible Party as defined in 16.1 shall be responsible for assuring all tests have been performed and the bolts comply with the requirements of this specification.

11.2 *Purpose of Lot Inspection*—The purpose of a lot inspection program shall be to ensure that each lot as represented by the samples tested conforms to the requirements of this specification. For such a plan to be fully effective, it is essential that secondary processors, distributors, and purchasers maintain the identification and integrity of each lot until the product is installed.

11.3 *Lot Method*—All bolts shall be processed in accordance with a lot identification-control quality assurance plan. The manufacturer, secondary processors, and distributors shall identify and maintain the integrity of each lot of bolts from raw-material selection through all processing operations and treatments to final packing and shipment. Each lot shall be assigned its own lot-identification number, each lot shall be tested, and the inspection test reports for each lot shall be retained.

11.4 *Lot Definition*—A lot shall be a quantity of uniquely identified heavy hex structural bolts of the same nominal size and length produced consecutively at the initial operation from a single mill heat of material and processed at one time, by the same process, in the same manner, so that statistical sampling is valid. The identity of the lot and lot integrity shall be maintained throughout all subsequent operations and packaging.

11.5 *Number of Tests*:

11.5.1 The minimum number of tests from each lot for the tests specified below shall be as follows:

Tests	Number of Tests in Accordance with
Hardness, tensile strength, proof load	Practice F1470
Surface discontinuities	Specification F788/F788M
Magnetic particle inspection	Specification F788/F788M
Dimensions and thread fit	ASME B18.2.6

11.5.2 For carburization and decarburization tests, not less than one sample unit per manufactured lot shall be tested for microhardness.

12. Test Methods

12.1 *Tensile, Proof Load, and Hardness*:

12.1.1 Tensile, proof load, and hardness tests shall be conducted in accordance with Test Methods F606.

12.1.2 Tensile strength shall be determined using the Wedge or Axial Tension Testing Method of Full Size Product Method or the Machined Test Specimens Method, depending on size and nominal length as specified in 6.2.1-6.2.2. Fracture on full-size tests shall be in the body or threads of the bolt without a fracture at the junction of the head and body.

12.1.3 Proof load shall be determined using Method 1, Length Measurement, or Method 2, Yield Strength, at the option of the manufacturer.

12.2 *Carburization/Decarburization*—Tests shall be conducted in accordance with Test Method F2328 Hardness Method.

12.3 *Microhardness*—Tests shall be conducted in accordance with Test Method E384.

12.4 *Magnetic Particle*—Inspection shall be conducted in accordance with Section 10.

13. Inspection

13.1 If the inspection described in 13.2 is required by the purchaser, it shall be specified in the inquiry and contract or order.

13.2 The purchaser's representative shall have free entry to all parts of manufacturer's works or supplier's place of business that concern the manufacture of the material ordered. The manufacturer or supplier shall afford the purchaser's representative all reasonable facilities to satisfy him that the material is being furnished in accordance with this specification. All tests and inspections required by the specification that are requested by the purchaser's representative shall be made before shipment, and shall be conducted as not to interfere unnecessarily with the operation of the manufacturer's works or supplier's place of business.

14. Rejection and Rehearing

14.1 Disposition of nonconforming material shall be in accordance with Practice F1470 section titled "Disposition of Nonconforming Lots."

15. Certification

15.1 When specified on the purchase order, the manufacturer or supplier, whichever is the responsible party as defined in Section 16 shall furnish the purchaser a test report that includes the following:

15.1.1 Heat analysis, heat number, and a statement certifying that heats having bismuth, selenium, tellurium, or lead intentionally added were not used to produce the bolts;

15.1.2 Results of hardness, tensile, and proof load tests;

15.1.3 Results of magnetic particle inspection for longitudinal discontinuities and transverse cracks;

15.1.4 Results of tests and inspections for surface discontinuities including visual inspection for head bursts;

15.1.5 Results of carburization and decarburization tests;

15.1.6 Statement of compliance with dimensional and thread fit requirements;

15.1.7 Lot number and purchase order number;

15.1.8 Complete mailing address of responsible party; and

15.1.9 Title and signature of the individual assigned certification responsibility by the company officers.

15.2 Failure to include all the required information on the test report shall be cause for rejection.

Copyright ASTM International
Provided by IHS under license with ASTM
No reproduction or networking permitted without license from IHS

Licensee=Dept of Transportation/5950087001
Not for Resale, 12/28/2012 15:03:18 MST

16. Responsibility

16.1 The party responsible for the fastener shall be the organization that supplies the fastener to the purchaser.

17. Product Marking

17.1 *Manufacturer's Identification*—All Type 1 and Type 3 bolts shall be marked by the manufacturer with a unique identifier to identify the manufacturer or private label distributor, as appropriate.

17.2 *Grade Identification*:

17.2.1 Type 1 bolts shall be marked "A490."

17.2.2 Type 3 bolts shall be marked "A490" underlined.

17.3 *Marking Location and Methods*—All marking shall be located on the top of the bolt head and shall be either raised or depressed at the manufacturer's option.

17.4 *Acceptance Criteria*—Bolts that are not marked in accordance with these provisions shall be considered nonconforming and subject to rejection.

17.5 Type and manufacturer's or private label distributor's identification shall be separate and distinct. The two identifications shall preferably be in different locations and, when on the same level, shall be separated by at least two spaces.

18. Packaging and Package Marking

18.1 *Packaging:*

18.1.1 Unless otherwise specified, packaging shall be in accordance with Practice D3951.

18.1.2 When special packaging requirements are required, they shall be defined at the time of the inquiry and order.

18.2 *Package Marking*:

18.2.1 Each shipping unit shall include or be plainly marked with the following information:

18.2.1.1 ASTM designation and type,

18.2.1.2 Size,

18.2.1.3 Name and brand or trademark of the manufacturer,

18.2.1.4 Number of pieces,

18.2.1.5 Lot number,

18.2.1.6 Purchase order number, and

18.2.1.7 Country of origin.

19. Keywords

19.1 bolts; alloy steel; steel; structural; weathering steel

SUMMARY OF CHANGES

Committee F16 has identified the location of selected changes to this standard since the last issue (A490–11) that may impact the use of this standard. (Approved April 1, 2012.)

(*1*) *Revised*—Section 2 to include protective coating F2833 grade 1.

(*2*) *Revised*—3.1 to include protective coating F2833 grade 1.

(*3*) *Revised*—3.2.1 to include protective coating F2833 grade 1.

(*4*) *Revised*—3.3 to include protective coating F2833 grade 1.

(*5*) *Revised*—4.3.1 to include protective coating F2833 grade 1.

Committee F16 has identified the location of selected changes to this standard since the last issue (A490–10a$^{\varepsilon 1}$) that may impact the use of this standard. (Approved Dec. 15, 2011.)

(*1*) *Revised*—Table 1.

Committee F16 has identified the location of selected changes to this standard since the last issue (A490–10) that may impact the use of this standard. (Approved Dec. 1, 2010.)

(*1*) *Revised*—In Table 3, reduced maximum Rockwell C hardness from 39 to 38 HRC

ASTM International takes no position respecting the validity of any patent rights asserted in connection with any item mentioned in this standard. Users of this standard are expressly advised that determination of the validity of any such patent rights, and the risk of infringement of such rights, are entirely their own responsibility.

This standard is subject to revision at any time by the responsible technical committee and must be reviewed every five years and if not revised, either reapproved or withdrawn. Your comments are invited either for revision of this standard or for additional standards and should be addressed to ASTM International Headquarters. Your comments will receive careful consideration at a meeting of the responsible technical committee, which you may attend. If you feel that your comments have not received a fair hearing you should make your views known to the ASTM Committee on Standards, at the address shown below.

This standard is copyrighted by ASTM International, 100 Barr Harbor Drive, PO Box C700, West Conshohocken, PA 19428-2959, United States. Individual reprints (single or multiple copies) of this standard may be obtained by contacting ASTM at the above address or at 610-832-9585 (phone), 610-832-9555 (fax), or service@astm.org (e-mail); or through the ASTM website (www.astm.org). Permission rights to photocopy the standard may also be secured from the ASTM website (www.astm.org/COPYRIGHT/).

Copyright ASTM International
Provided by IHS under license with ASTM
No reproduction or networking permitted without license from IHS

Licensee=Dept of Transportation/5950087001
Not for Resale, 12/28/2012 15:03:18 MST